Exhibit A

Project Plans

LAKE MARY ROAD BIKE PATH COMPLETION PROJECT

TOWN OF MAMMOTH LAKES
COUNTY OF MONO
INYO NATIONAL FOREST

CIM-05-03T NON-MOTOR/NON-WILDERNESS TRAILS
LAKE MARY ROAD BIKE PATH

INDEX TO SHEETS:

SHEET	DRAWING	DESCRIPTION
GENERAL		
01	0.1	COVER SHEET
02	0.2	GENERAL SITE NOTES AND SPECIFICATIONS
03	0.3	CONSTRUCTION NOTES AND LEGEND
04	0.4	SURVEY CONTROL
05	0.5	GENERAL DETAILS 1
06	0.6	GENERAL DETAILS 2
07	0.7	STRUCTURAL STEEL BUS SHELTER DETAILS 1
08	0.8	STRUCTURAL STEEL BUS SHELTER DETAILS 2
09	0.9	STRUCTURAL STEEL BUS SHELTER DETAILS 3
10	0.10	STRUCTURAL STEEL BUS SHELTER DETAILS 4
11	0.11	TIMBER BUS SHELTER DETAILS 1
12	0.12	TIMBER BUS SHELTER DETAILS 2
13	0.13	TIMBER BUS SHELTER DETAILS 3
14	0.14	TIMBER BUS SHELTER DETAILS 4
HORSESHOE LAKE		
15	1.1	PLAN AND PROFILE
LAKE MAMIE		
16	2.1	PLAN AND PROFILE
POKONOBE		
17	3.1	PLAN AND DETAILS
OLD MAMMOTH ROAD		
18	5.1	PLAN AND PROFILE
TAMARACK REALIGNMENT		
19	6.1	PLAN AND PROFILE (STA 10+00 TO 20+00)
20	6.2	PLAN AND PROFILE (STA 20+00 TO 31+00)
21	6.3	PLAN AND PROFILE (STA 31+00 TO END)
22	6.4	BRIDGE DETAILS
23	6.5	TUNNEL DETAILS 1
24	6.6	TUNNEL DETAILS 2
25	6.7	WATER LINE RELOCATION PLAN

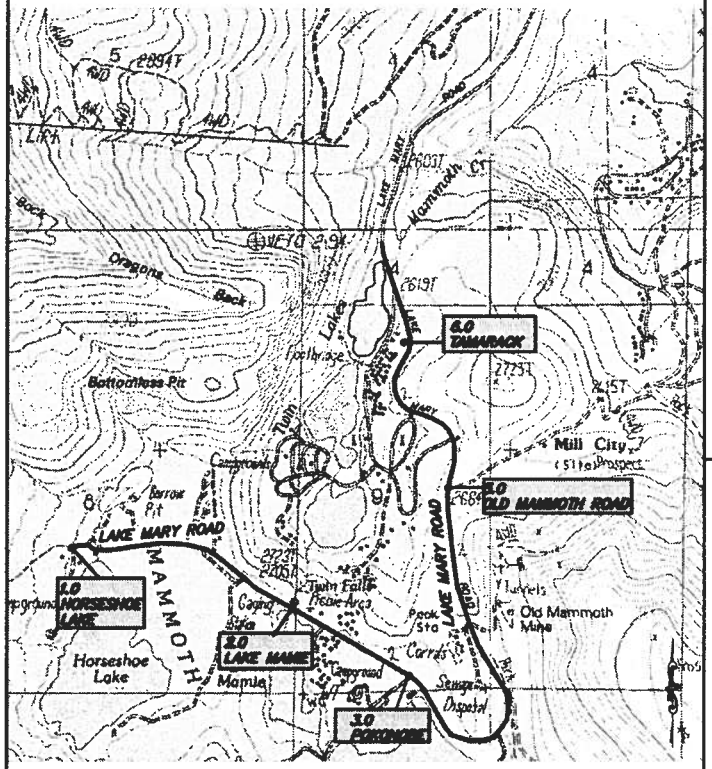

VICINITY MAP
N.T.S.

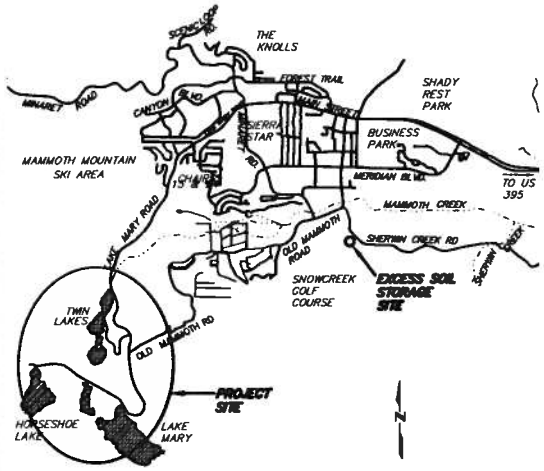

EXCESS EXCAVATION STORAGE SITE
N.T.S.

DESIGN TEAM ROSTER:

USDA FOREST SERVICE, INYO NATIONAL FOREST
351 PACU LANE, SUITE 200
BISHOP, CA 93514
GLEN BEALL, FOREST ENGINEER
760-873-2407
MAIO GROSSHICK, LANDSCAPE ARCHITECT
760-873-2458
KATHLEEN NELSON, FOREST BOTANIST
760-873-2498

TOWN OF MAMMOTH LAKES
P.O. BOX 1609
MAMMOTH LAKES, CA 93546
PETER BERNASCONI, PE, SR. ASSOCIATE
CIVIL ENGINEER
760-934-8989

CIVIL ENGINEER / SURVEYOR:
TRIAD/HOLMES ASSOCIATES
549 OLD MAMMOTH RD. SUITE 202
P.O. BOX 1570
MAMMOTH LAKES, CA 93546
PAUL ROTEN, PE
760-934-7588

SOILS ENGINEER:
SIERRA GEOTECHNICAL SERVICES INC.
569 OLD MAMMOTH RD. SUITE 222
P.O. BOX 5024
MAMMOTH LAKES, CA. 93546
JOE ADLER
760-934-3992

UTILITY COORDINATION
MAMMOTH COMMUNITY WATER DISTRICT
P.O. BOX 597
MAMMOTH LAKES, CA 93546
JOHN PEDERSON, PE
760-934-2596

VERIZON
385 S. FOWLER STREET
BISHOP, CA 93514
MILES MCMULLEN
760.872.0855

SOUTHERN CALIFORNIA EDISON
374 LAGOON STREET
BISHOP, CA 93514
ROBERT CASTANEDA
760-873-2981

RECOMMENDED BY:
DISTRICT RANGER
MIKE SCHLAFMANN — DATE

APPROVED BY:
FOREST SUPERVISOR
JIM UPCHURCH — DATE

APPROVED BY:
FOREST ENGINEER
DON BEALL II — DATE

ABBREVIATIONS:

AB	AGGREGATE BASE	H	HEIGHT
AC	ASPHALT CONCRETE	HP	HIGH POINT
AGG	AGGREGATE	HWL	HIGH WATER LEVEL
AP	ANGLE POINT	INT, INTX	INTERSECTION
ASB	AGGREGATE SUB-BASE	INV	INVERT
BC	BEGIN CURVE	LF	LINEAR FEET
BCR	BEGIN CURB RETURN	LP	LOW POINT
BGN	BEGIN	MCWD	MAMMOTH COMMUNITY WATER DISTRICT
BVC	BEGIN VERTICAL CURVE	MLFPD	MAMMOTH LAKES FIRE PROTECTION DISTRICT
BVCE	BEGIN VERTICAL CURVE ELEVATION	NTS	NOT TO SCALE
BVCS	BEGIN VERTICAL CURVE STATION	OC	ON CURVE
BS	BACK OF SIDEWALK	PCC	POINT ON COMPOUND CURVE
BW	BACK OF WALK	PRC	POINT OF REVERSE CURVE
CB	CATCH BASIN	PVC	POINT ON VERTICAL CURVE
CF	CUBIC FEET	PVC	POLYVINYL CHLORIDE
CL	CENTERLINE	PVI	POINT OF VERTICAL INTERSECTION
CMP	CORRUGATED METAL PIPE	R	RADIUS
CPP	CORRUGATED PLASTIC PIPE	SL	SEWER LATERAL
CSS	CALTRANS STANDARD SPECIFICATIONS	SMH	SEWER MANHOLE
CY	CUBIC YARD	SS	SANITARY SEWER
DI	DROP INLET	STA	STATION
DIP	DUCTILE IRON PIPE	STD	STANDARD
EC	END CURVE	TBC	TOP BACK CURB
EG	EXISTING GRADE	TC	TOP OF CURB
EL, ELEV	ELEVATION	TF	TOP OF FOOTING
EP	EDGE OF PAVEMENT	TG	TOP OF GRATE
EVC	END VERTICAL CURVE	TP	TOP OF PIPE
EVCE	END VERTICAL CURVE ELEVATION	TOML	TOWN OF MAMMOTH LAKES
EVCS	END VERTICAL CURVE STATION	TRANS	TRANSITION
EX, EXIST	EXISTING	TS	TOP OF SIDEWALK
FF	FINISHED FLOOR	TW	TOP OF WALL
FG	FINISHED GRADE	TYP	TYPICAL
FL	FLOW LINE	VC	VERTICAL CURVE
FP	FINISHED PAD	VG	VALLEY GUTTER
FS	FINISHED SURFACE	VLT	VAULT
GB	GRADE BREAK	V, VOL	VOLUME

LOCATION MAP
N.T.S.

USDA FOREST SERVICE
PACIFIC SOUTHWEST REGION R5

Triad/holmes assoc.
civil engineering
land surveying
MAMMOTH LAKES
BISHOP
NAPA
PLEASANTON
REDWOOD CITY
SAN LUIS OBISPO
PREPARED & SUBMITTED BY:
REGISTERED PROFESSIONAL ENGINEER
PAUL ROTEN
C 56891
CIVIL
STATE OF CALIFORNIA

Copyright (C) 2010 by Triad/Holmes Associates
All Rights Reserved. This Document is Submitted Only for Use on the Project Specified in the Title Block. Any Reproduction of this Document or Portions of this Document, Without the Expressed Written Consent of Triad/Holmes, is Prohibited.

REVIEWED BY:
TOWN OF MAMMOTH LAKES PUBLIC WORKS DEPARTMENT
MARIANNE C. JARVIS
R.E. 043316

INYO NATIONAL FOREST
LAKE MARY ROAD BIKE PATH COMPLETION PROJECT
COVER SHEET

DATE: 04/01/10
SCALE: AS SHOWN
DRAWN: MP
JOB NO.: 2008.6
0.1
SHEET 1 of 25

GP 09-

GRADING AND SITEWORK SPECIFICATIONS:

1. ALL WORK SHALL CONFORM TO THE CONDITIONS OF THE PERMIT AND SECTIONS 12.04 AND 12.08 OF THE MUNICIPAL CODE. ALL WORK SHALL CONFORM TO THE MAY 2006 EDITION OF THE "CALTRANS STANDARD AND SPECIFICATIONS" (CSS), AND THESE PLANS. IN THE EVENT OF CONFLICT BETWEEN THE CSS AND THE PLANS, THE PLANS SHALL PREVAIL.

2. AT LEAST FORTY-EIGHT (48) HOURS PRIOR TO COMMENCING CONSTRUCTION, THE CONTRACTOR SHALL CONTACT U.S.A. – UNDERGROUND SERVICE ALERT – AT (800) 227-2600 AND REQUEST THAT UTILITY OWNERS MARK OR OTHERWISE INDICATE THE LOCATION OF THEIR FACILITIES. THE CONTRACTOR SHALL TAKE ALL NECESSARY MEASURES TO PROTECT ALL UTILITIES AND ALL STRUCTURES FOUND AT THE SITE. IT IS THE CONTRACTOR'S RESPONSIBILITY TO VERIFY THE EXACT LOCATION AND DEPTH OF ALL UTILITIES PRIOR TO CONSTRUCTION. UTILITIES SHOWN ARE FROM AVAILABLE RECORDS AND FIELD MEASUREMENTS.

3. CONTRACTOR SHALL TAKE ALL SUCH MEASURES NECESSARY TO CONTROL DUST IN CONSTRUCTION AREAS OR ON ACCESS ROADS. SUFFICIENT WATER TRUCKS SHALL BE MADE AVAILABLE FOR DUST CONTROL PURPOSES. ALL EXPOSED SOIL SURFACES SHALL BE MOISTENED AS REQUIRED TO AVOID NUISANCE CONDITIONS AND INCONVENIENCES FOR LOCAL RESIDENTS AND TRAVELERS OF NEARBY ROADWAYS.

4. ANY EVIDENCE OF THE HISTORICAL PRESENCE OF MAN FOUND DURING CONSTRUCTION SHALL BE BROUGHT TO THE ATTENTION OF THE MAMMOTH LAKES PUBLIC WORKS DEPARTMENT AND CONSTRUCTION SHALL STOP UNTIL FURTHER NOTICE.

5. THE LIMITS OF CONSTRUCTION SHALL BE CAREFULLY AND FULLY FLAGGED PRIOR TO START OF CONSTRUCTION, AND POSTED SO AS TO PREVENT DAMAGE TO VEGETATION AND DISTURBANCE TO SOILS OUTSIDE OF THE AREA OF CONSTRUCTION.

6. CONTRACTOR SHALL CONDUCT ALL GRADING OPERATIONS IN ACCORDANCE WITH THE TOWN OF MAMMOTH LAKES ORDINANCES AND STANDARDS AND IN CONFORMANCE WITH THE CONSTRUCTION SAFETY ORDERS OF THE STATE OF CALIFORNIA, DEPARTMENT OF INDUSTRIAL RELATIONS, DIVISION OF INDUSTRIAL SAFETY. IN ADDITION, CONTRACTOR SHALL COMPLY WITH ALL REQUIREMENTS OF GENERAL OSHA STANDARDS FOR THE PROTECTION OF WORKMEN AND THE GENERAL PUBLIC. OSHA PERMITS REQUIRED FOR DEEP TRENCHES.

7. FINISHED GRADES IN ALL AREAS SHALL COMPLY WITH PLAN ELEVATIONS. NO AREAS SHALL BE LEFT SUCH THAT A PONDING CONDITION OCCURS.

8. AT NO TIME SHALL THE CONTRACTOR DEWATER THE SITE BY PUMPING INTO THE EXISTING LAKE, STORM DRAIN, OR SUBDRAIN SYSTEM WITHOUT AGENCY APPROVED FILTRATION.

9. ANY EARTH MATERIAL IMPORTED OR EXCAVATED ON THE PROPERTY MAY BE UTILIZED IN THE FILL, PROVIDED THAT EACH MATERIAL HAS BEEN DETERMINED TO BE SUITABLE BY THE GEOTECHNICAL ENGINEER. ALL FILL SHALL BE FREE OF ORGANIC AND OTHER DELETERIOUS MATERIAL. SOILS OF POOR GRADATION, EXPANSION POTENTIAL, OR STRENGTH CHARACTERISTICS SHALL BE PLACED IN AREAS DESIGNATED BY THE CONSULTANT OR SHALL BE MIXED WITH OTHER SOILS TO SERVICE AS SATISFACTORY SOIL MATERIAL.

10. THE CONTRACTOR SHALL PREPARE A SWPPP AND CONSTRUCT THE INTERIM EROSION CONTROL AND ADHERE TO THE LAHONTAN GUIDELINES FOR EROSION CONTROL FOR THE TOWN OF MAMMOTH LAKES.

11. GROUND IN AREAS TO BE PAVED SHALL BE SCARIFIED, MOISTENED, AND COMPACTED TO A MINIMUM 95% OF MAXIMUM DENSITY FOR THE UPPER 12 INCHES. EXISTING SLOPES STEEPER THAN 5:1 SHALL BE KEYED WITH EQUIPMENT WIDTH BENCHES BEFORE PLACEMENT OF FILL.

12. ALL SITE CONCRETE SHALL HAVE A MINIMUM 28-DAY COMPRESSIVE STRENGTH OF 34.5MPA (5000 P.S.I.), FIBERMESH SHALL BE ADDED AT A RATE OF 1.5 LBS/CUBIC YARD. REINFORCING STEEL, IF REQUIRED, SHALL BE DEFORMED BILLET-STEEL BARS CONFORMING TO THE SPECIFICATIONS OF ASTM A 615 GRADE 36.

13. EXISTING UTILITIES AND STRUCTURES ARE SHOWN IN THEIR APPROXIMATE LOCATION AND EXTENT. CONTRACTOR SHALL VERIFY AND TAKE PRECAUTIONS TO PROTECT EXISTING UTILITIES AND STRUCTURES.

14. CONTRACTOR SHALL NOTIFY THE FOLLOWING COMPANIES/AGENCIES AT LEAST 48 HOURS IN ADVANCE FOR REQUESTING SERVICE/INSPECTION:

    INSPECTION:
    TOWN OF MAMMOTH LAKES
    PUBLIC WORKS DEPT.
    (760) 934-8989

15. BUS STOP SIGNS WILL BE SUPPLIED AND INSTALLED BY EASTERN SIERRA TRANSIT AUTHORITY.

16. THE TOWN OF MAMMOTH LAKES STANDARD DETAILS HAVE BEEN ADDED TO THESE PLANS FOR THE CONVINIENCE OF THE BIDDER. FINAL CONSTRUCTION SHALL BE PERFORMED TO THE LATEST TOWN OF MAMMOTH LAKES STANDARDS.

EROSION CONTROL NOTES:

(THE FOLLOWING MUST BE INCORPORATED INTO A SWPPP AS REQUIRED BY THE PROJECT SPECIFICATIONS)

1. DRAINAGE COLLECTION, RETENTION AND INFILTRATION FACILITIES SHALL BE CONSTRUCTED AND MAINTAINED TO PREVENT TRANSPORT OF THE RUNOFF FROM A 20-YEAR, 1-HOUR DESIGN STORM FROM THE PROJECT SITE.
2. SURPLUS OR WASTE MATERIAL SHALL NOT BE PLACED IN DRAINAGE WAYS.
3. ALL LOOSE PILES OF SOIL, SILT, CLAY, SAND, DEBRIS, OR EARTHEN MATERIALS SHALL BE PROTECTED IN A REASONABLE MANNER TO PREVENT ANY DISCHARGE TO WATERS OF THE STATE.
4. DEWATERING SHALL BE DONE IN A MANNER SO AS TO PREVENT THE DISCHARGE OF EARTHEN MATERIAL FROM THE SITE.
5. ALL DISTURBED AREAS SHALL BE STABILIZED BY APPROPRIATE SOIL STABILIZATION MEASURES BY OCTOBER 15 OF EACH YEAR.
6. ALL WORK PERFORMED BETWEEN OCTOBER 15 AND APRIL 15 OF EACH YEAR SHALL BE CONDUCTED IN SUCH A MANNER THAT THE PROJECT CAN BE WINTERIZED WITHIN 48 HOURS.
7. WHERE POSSIBLE, EXISTING DRAINAGE PATTERNS SHALL NOT BE SIGNIFICANTLY MODIFIED.
8. AFTER COMPLETION OF A CONSTRUCTION PROJECT, ALL SURPLUS OR WASTE EARTHEN MATERIAL SHALL BE REMOVED FROM THE SITE AND DEPOSITED AT A LEGAL POINT OF DISPOSAL.
9. ALL NON-CONSTRUCTION AREAS SHALL BE PROTECTED BY FENCING OR OTHER MEANS TO PREVENT UNNECESSARY DISTURBANCE.
10. DURING CONSTRUCTION, TEMPORARY EROSION CONTROL FACILITIES, (E.G., IMPERMEABLE DIKES, FILTER FENCES, ETC.) SHALL BE USED AS NECESSARY TO PREVENT DISCHARGE OF EARTHEN MATERIALS FROM THE SITE DURING PERIODS OF PRECIPITATION OR RUNOFF.
11. EROSION AND SEDIMENT CONTROL MEASURES SHALL BE INSTALLED TO TOWN OF MAMMOTH LAKES EROSION CONTROL STANDARDS, INSPECTED AND APPROVED PRIOR TO ANY SITE DISTURBANCE.
12. DRAINAGE SWALES DISTURBED BY CONSTRUCTION ACTIVITIES SHALL BE STABILIZED BY THE ADDITION OF CRUSHED ROCK OR RIP RAP AS NECESSARY OR OTHER APPROPRIATE STABILIZATION METHODS.
13. WHERE CONSTRUCTION ACTIVITIES INVOLVE THE CROSSING AND/OR ALTERATION OF A STREAM CHANNEL, SUCH ACTIVITIES SHALL BE TIMED TO OCCUR DURING THE PERIOD IN WHICH STREAM FLOW IS EXPECTED TO BE LOWEST FOR THE YEAR.
14. CONTRACTOR SHALL COMPLY WITH ALL REQUIREMENTS OF AN APPROVED STORM WATER POLLUTION PREVENTION PLAN (SWPPP) OR STORM WATER MANAGEMENT PLAN (SWMP). OFFSITE RUNOFF SHALL NOT COME IN CONTACT WITH ANY ONSITE CONSTRUCTION MATERIALS. ONSITE RUNOFF SHALL BE CONTAINED ONSITE OR ALLOWED TO EXIT THE SITE IF IT CARRIES NO VISIBLE OR NONVISIBLE CONTAMINANTS. IF SITE CONTAMINANTS LEAVE THE SITE, SAMPLING WILL BE REQUIRED. INTERIM EROSION CONTROL FACILITIES SHALL BE IN PLACE PRIOR TO ANY GRADING OPERATIONS. ADEQUATE EROSION CONTROL MEASURES SHALL BE INSTALLED AND MAINTAINED ON-SITE AND AROUND ALL POTENTIALLY AFFECTED DRAINAGE FACILITIES.

USDA FOREST SERVICE
PACIFIC SOUTHWEST REGION R5

tha
tkd/holmes assoc.
civil engineering
land surveying
MAMMOTH LAKES
BISHOP
NAPA
PLEASANTON
REDWOOD CITY
SAN LUIS OBISPO

REGISTERED PROFESSIONAL ENGINEER
RAND BOYD HOLMES
C 58891
CIVIL
STATE OF CALIFORNIA

DATE

Copyright (C) 2010 tkd Holmes Associates
All Rights Reserved. This Document is Intended Only for Use on the Project Specified in the Title Block. Any Reproduction of this Document or Portions of this Document, Without the Expressed Written Consent of tkd/Holmes, is Prohibited.

REVIEWED BY:
TOWN OF MAMMOTH LAKES PUBLIC WORKS DEPARTMENT

RAYMOND C. JAYNE III
R.E. 042338

PROJECT: INYO NATIONAL FOREST
TRAILHEAD: LAKE MARY ROAD BIKE PATH COMPLETION PROJECT
GENERAL SITE NOTES AND SPECIFICATIONS

DATE 04/01/10
SCALE AS SHOWN
DRAWN MP
JOB NO. 2008.6
NO. 0.2
SHEET 2 OF 25

GP 08-

F:\01 Mammoth\2008-01\proof\Improvement plans\proj\2008-8 00 General R2.dwg, Apr 01,2010 - 8:56am, mpatchett

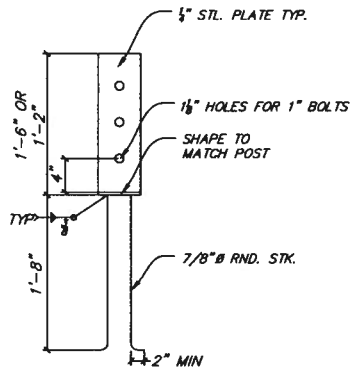

BLADE BRACKET
NTS
(TYP. ALL COLUMNS/POSTS)

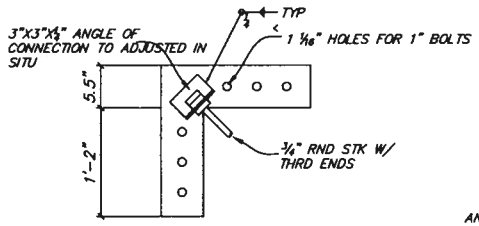

'L' BRACKET
NTS

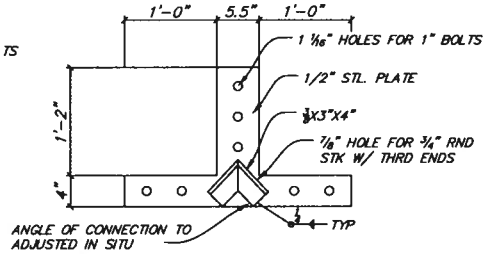

'T' BRACKET
NTS

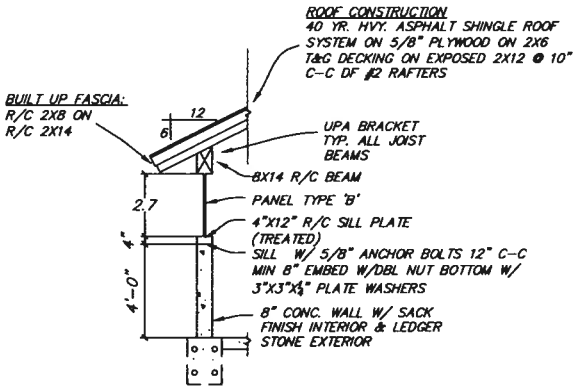

DETAIL 1

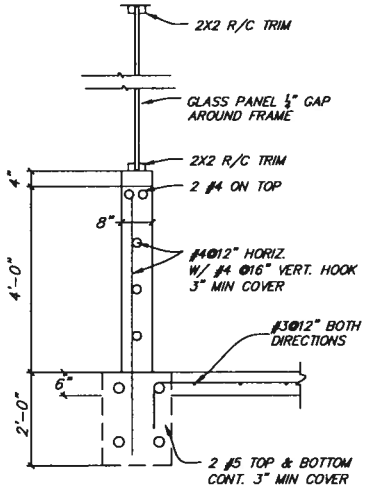

DETAIL 2

NOTES:
1. DO NOT SCALE FROM DRAWINGS
2. VERIFY ALL DIMENSIONS PRIOR TO CONSTRUCTION. IF ANY INCONSISTENCIES ARE FOUND, THEY MUST BE REPORTED TO THE RESIDENT ENGINEER.
3. ALL WORK TO LATEST EDITION 2007 CBC, AND TOML CODES AND STANDARDS.
4. ALL LUMBER TO BE ROUGH SAWN UNLESS OTHERWISE NOTED.
5. COUNTER SINK ALL ANCHOR BOLTS IN SILL PLATE
6. ALL STRUCTURAL PLATES AND HARDWARE SHALL BE POWDER COATED BLACK.
7. ALL BOLTS TO BE BACKED WITH SQUARE WASHER PLATES
8. ALL WOOD SHALL BE COATED WITH A CABOTS CLEAR OIL STAIN. COLOR SELECTED BY THE TOWN.
9. ALL BEAM TO POST CONNECTIONS TO CJT6 CONNECTION UNLESS OTHERWISE NOTED
10. ALL INTERIOR CONC. WALLS WILL HAVE A SACK FINISH AND EXTERIOR WALLS TO HAVE A LEDGER STONE FINISH

(11) TYPICAL TIMBER BUS SHELTER DETAIL 3
N.T.S.

USDA FOREST SERVICE
PACIFIC SOUTHWEST REGION R5

thd/holmes assoc.
civil engineering land surveying
MAMMOTH LAKES
BISHOP
NAPA
PLEASANTON
REDWOOD CITY
SAN LUIS OBISPO

C 56891

REVIEWED BY:
TOWN OF MAMMOTH LAKES PUBLIC WORKS DEPARTMENT

INYO NATIONAL FOREST
LAKE MARY ROAD BIKE PATH COMPLETION PROJECT
TIMBER BUS SHELTER DETAILS 3

04/01/10
AS SHOWN
MP
2008.6
0.13
13 of 25

GP 09-

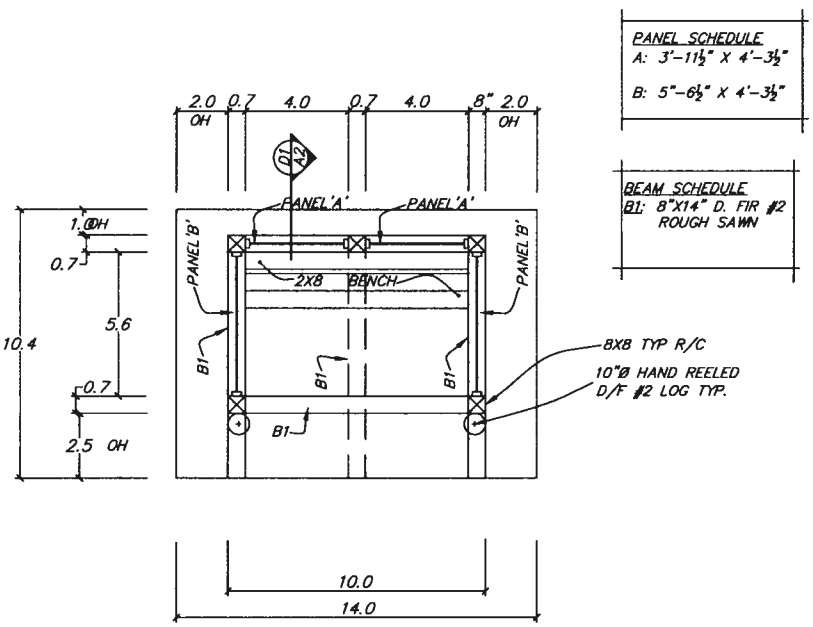

PLAN

PANEL SCHEDULE
A: 3'-11½" X 4'-3½"
B: 5"-6½" X 4'-3½"

BEAM SCHEDULE
B1: 8"X14" D. FIR #2 ROUGH SAWN

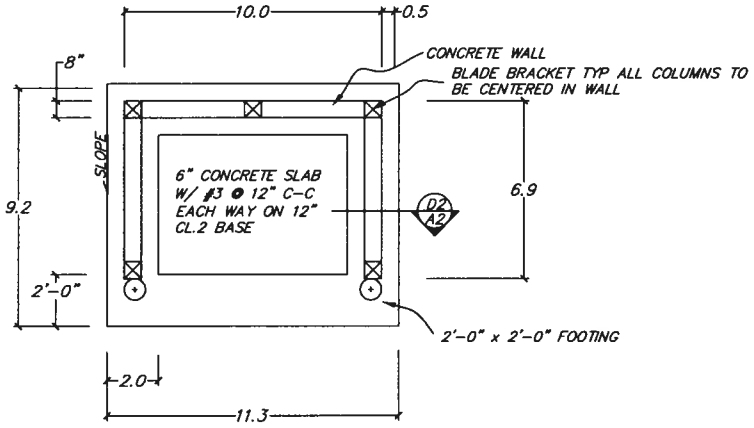

FOUNDATION

(11) TYPICAL TIMBER BUS SHELTER DETAIL 2
N.T.S.

USDA FOREST SERVICE
PACIFIC SOUTHWEST REGION R5

tha
tfad/holmes assoc.
civil engineering
land surveying
MAMMOTH LAKES
BISHOP
NAPA
PLEASANTON
REDWOOD CITY
SAN LUIS OBISPO

REGISTERED PROFESSIONAL ENGINEER
PAUL EDWARD ROTEN
C 56891
CIVIL
STATE OF CALIFORNIA

Copyright (C) 2010 by Tfad/Holmes Associates All Rights Reserved. This Document is Intended Only for Use on the Project Specified in the Title Block. Any Reproduction of this Document or Portions of this Document, Without the Expressed Written Consent of Tfad/Holmes, is Prohibited.

REVIEWED BY:
TOWN OF MAMMOTH LAKES PUBLIC WORKS DEPARTMENT

RAYMOND C. JARVIS DATE
P.E. C63338

INYO NATIONAL FOREST
LAKE MARY ROAD BIKE PATH COMPLETION PROJECT
TIMBER BUS SHELTER DETAILS 2

04/01/10
AS SHOWN
MP
2008.6
0.12
12 of 25

GP 09-

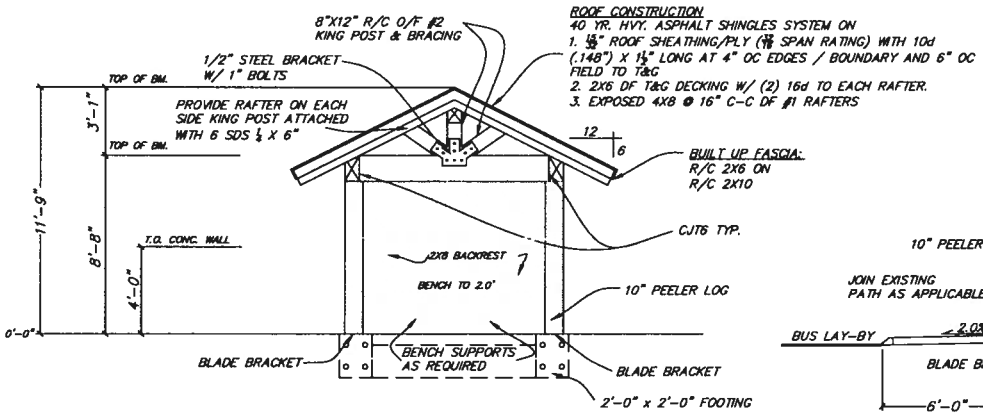

ROOF CONSTRUCTION
40 YR. HVY. ASPHALT SHINGLES SYSTEM ON
1. 15/32" ROOF SHEATHING/PLY (32/16 SPAN RATING) WITH 10d (.148") X 1½" LONG AT 4" OC EDGES / BOUNDARY AND 6" OC FIELD TO T&G
2. 2X6 DF T&G DECKING W/ (2) 16d TO EACH RAFTER.
3. EXPOSED 4X8 @ 16" C-C DF #1 RAFTERS

FRONT

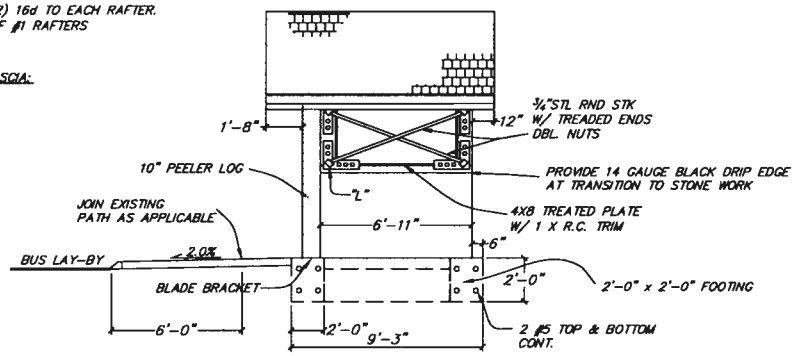

RIGHT-SIDE VIEW

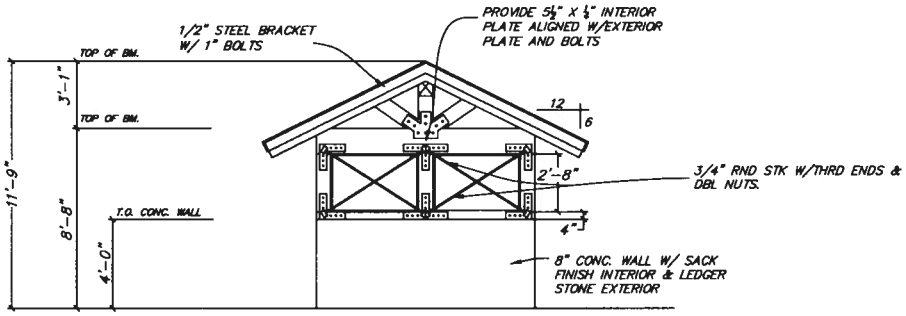

BACK

(11) TYPICAL TIMBER BUS SHELTER DETAIL 1
N.T.S.

USDA FOREST SERVICE
PACIFIC SOUTHWEST REGION R5

tha
tind/holmes assoc.
civil engineering
land surveying
MAMMOTH LAKES
BISHOP
NAPA
PLEASANTON
REDWOOD CITY
SAN LUIS OBISPO

REGISTERED PROFESSIONAL ENGINEER
C 56891
CIVIL
STATE OF CALIFORNIA

COPYRIGHT (C) 2010 tind/Holmes Associates
All Rights Reserved. This Document is Intended Only for Use on the Project Specified in the Title Block. Any Reproduction of this Document or Portions of this Document, Without the Expressed Written Consent of tind/Holmes, is Prohibited.

REVIEWED BY:
TOWN OF MAMMOTH LAKES PUBLIC WORKS DEPARTMENT

WILLIAM C. JAMES DATE
P.E. 048399

PROJECT: INYO NATIONAL FOREST
TRACT NAME: LAKE MARY ROAD BIKE PATH COMPLETION PROJECT
DRAWING TITLE: TIMBER BUS SHELTER DETAILS 1

DATE: 04/01/10
SCALE: AS SHOWN
DRAWN: MP
JOB NO.: 2008.6
DWG. NO.: 0.11
SHEET 11 OF 25

CD-08-11

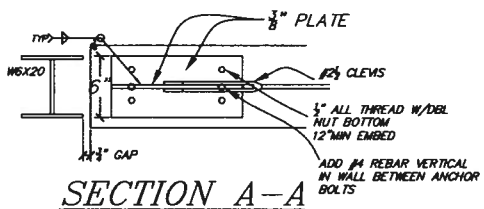

SECTION A–A
NTS

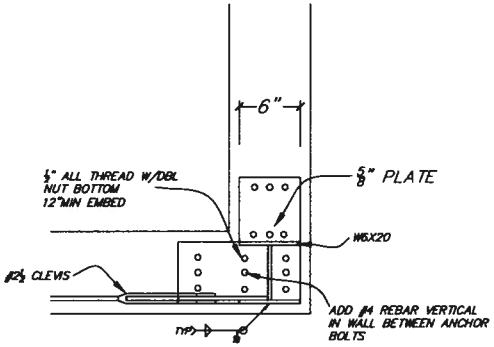

SECTION B–B
NTS

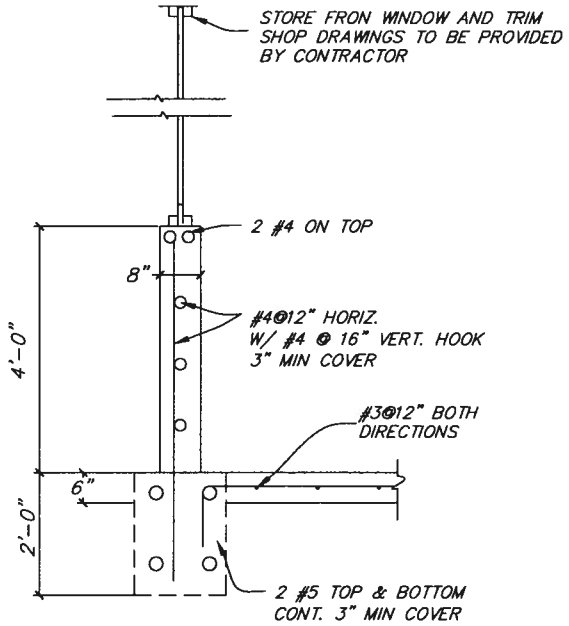

SECTION C–C
NTS

(11) TYPICAL STRUCTURAL STEEL BUS SHELTER DETAIL 4
N.T.S.

USDA FOREST SERVICE
PACIFIC SOUTHWEST REGION R5

thaa
trial/holmes assoc.
civil engineering land surveying
MAMMOTH LAKES BISHOP NAPA PLEASANTON REDWOOD CITY SAN LUIS OBISPO

REGISTERED PROFESSIONAL ENGINEER
PAUL EDWARD ROTEN
C 56891
CIVIL
STATE OF CALIFORNIA

Copyright (C) 2010 by Trial/Holmes Associates All Rights Reserved. This Document is Intended Only for Use on the Project Specified in the Title Block. Any Reproduction of this Document or Portions of this Document, Without the Expressed Written Consent of Trial/Holmes, is Prohibited.

REVIEWED BY:
TOWN OF MAMMOTH LAKES PUBLIC WORKS DEPARTMENT

MAMMOTH C. JAMES DATE
P.E. CA5346

INYO NATIONAL FOREST
LAKE MARY ROAD BIKE PATH COMPLETION PROJECT
STRUCTURAL STEEL BUS SHELTER DETAILS 4

DATE 04/01/10
SCALE AS SHOWN
DRAWN MP
CKD BY 2008.6
0.10
SHEET 10 OF 25

GP 09-__

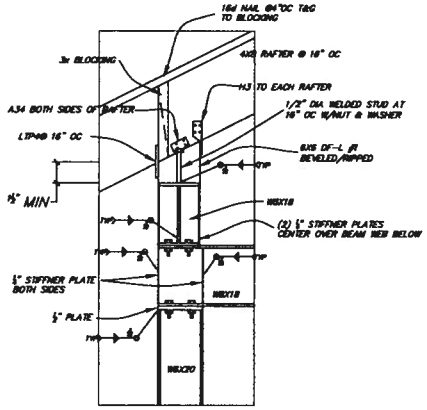

DETAIL 1
NTS

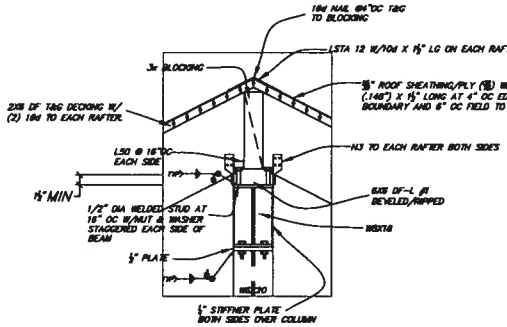

DETAIL 2
NTS

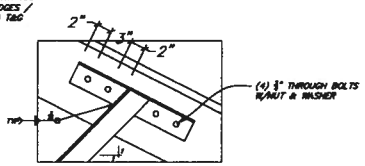

DETAIL 3
NTS

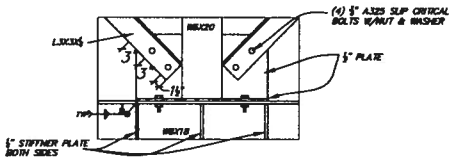

DETAIL 4
NTS

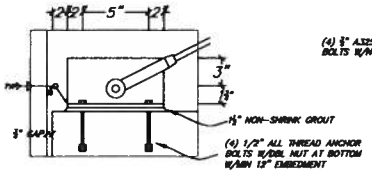

DETAIL 5
NTS

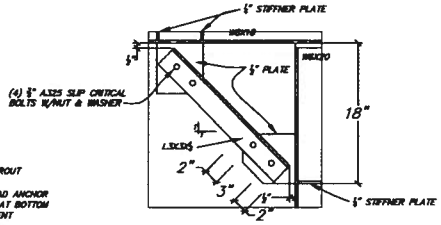

DETAIL 6
NTS

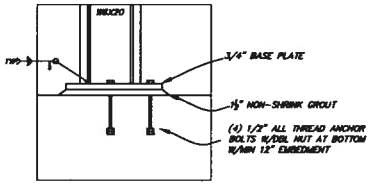

DETAIL 7
NTS

NOTES:
1. DO NOT SCALE FROM DRAWINGS
2. VERIFY ALL DIMENSIONS PRIOR TO CONSTRUCTION. IF ANY INCONSISTENCIES ARE FOUND, THEY MUST BE REPORTED TO THE RESIDENT ENGINEER.
3. ALL WORK TO LATEST EDITION 2007 CBC, AND TOML CODES AND STANDARDS.
4. ALL BOLTS TO BE ⅝" A325-XUNLESS OTHERWISE NOTED

(11) TYPICAL STRUCTURAL STEEL BUS SHELTER DETAIL 3
N.T.S.

USDA FOREST SERVICE
PACIFIC SOUTHWEST REGION R5

trad/holmes assoc.
civil engineering land surveying
MAMMOTH LAKES BISHOP NAPA PLEASANTON REDWOOD CITY SAN LUIS OBISPO

REGISTERED PROFESSIONAL ENGINEER
C 56891
CIVIL
STATE OF CALIFORNIA

Copyright (C) 2010 by Trad/Holmes Associates All Rights Reserved. This Document is Intended Only for Use on the Project Specified in the Title Block. Any Reproduction of this Document or Portions of this Document, Without the Expressed Written Consent of Trad/Holmes, is Prohibited.

MAMMOTH
REVIEWED BY: TOWN OF MAMMOTH LAKES PUBLIC WORKS DEPARTMENT
RAYMOND C. JARVIS DATE P.E. CAD/TM

INYO NATIONAL FOREST
LAKE MARY ROAD BIKE PATH COMPLETION PROJECT
STRUCTURAL STEEL BUS SHELTER DETAILS 3

04/01/10
AS SHOWN
MP
2008.6
0.9
SHEET 9 OF 25

GP 09-__

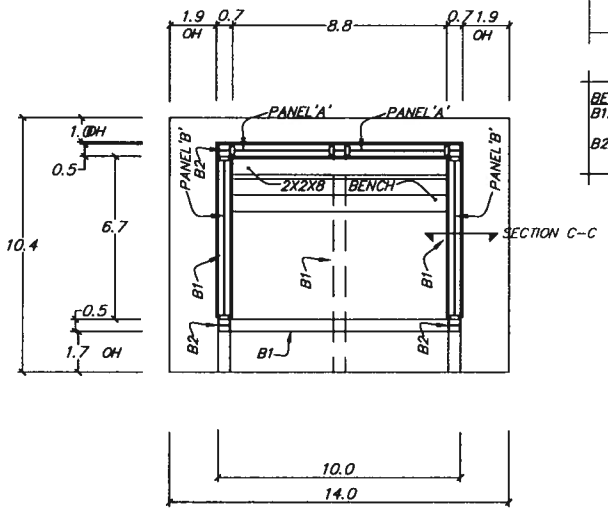

PLAN

PANEL SCHEDULE
A: TBD
B: TBD

BEAM SCHEDULE
B1: W8X18
B2: W6X20

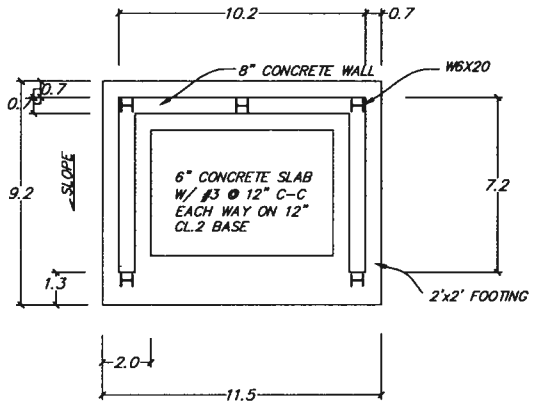

FOUNDATION

(11) TYPICAL STRUCTURAL STEEL BUS SHELTER DETAIL 2
N.T.S.

USDA FOREST SERVICE
PACIFIC SOUTHWEST REGION R5

tha trad/holmes assoc.
civil engineering
land surveying
MAMMOTH LAKES
BISHOP
NAPA
PLEASANTON
REDWOOD CITY
SAN LUIS OBISPO

REGISTERED PROFESSIONAL ENGINEER
JAY EDWARD HOLMES
C 56891
CIVIL
STATE OF CALIFORNIA

Copyright (C) 2010 by trad/holmes associates
All Rights Reserved. This Document is exclusively Only for Use on the Project Specified in the Title Block. Any Reproduction of this Document or Portions of this Document, without the Expressed Written Consent of trad/holmes, is Prohibited.

REVIEWED BY:
TOWN OF MAMMOTH LAKES PUBLIC WORKS DEPARTMENT
MAMMOTH C. JAMES DATE
P.E. CHECKED

INYO NATIONAL FOREST
LAKE MARY ROAD BIKE PATH COMPLETION PROJECT
STRUCTURAL STEEL BUS SHELTER DETAILS 2

DATE 04/01/10
SCALE AS SHOWN
DRAWN MP
JOB NO. 2008.6
0.8
SHEET 8 OF 25

GP 09-___

E:\01 Mammoth\2008-3\dwg\improvement plans\dwg\2008-6 01 Culvert 12.dwg Apr 01,2010 - 12:03am, mpatchett

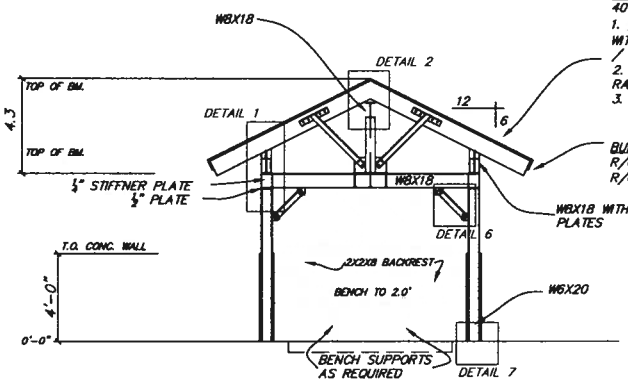

ROOF CONSTRUCTION
40 YR. HVY. ASPHALT SHINGLES SYSTEM ON
1. 15/32" ROOF SHEATHING/PLY (32/16 SPAN RATING) WITH 10d (.148") X 1½" LONG AT 4" OC EDGES / BOUNDARY AND 6" OC FIELD TO T&G
2. 2X6 DF T&G DECKING W/ (2) 16d TO EACH RAFTER.
3. EXPOSED 4X8 @ 16" C-C DF #1 RAFTERS

BUILT UP FASCIA:
R/C 2X8 ON
R/C 2X14

W8X18 WITH ½" STIFFNER PLATES

FRONT

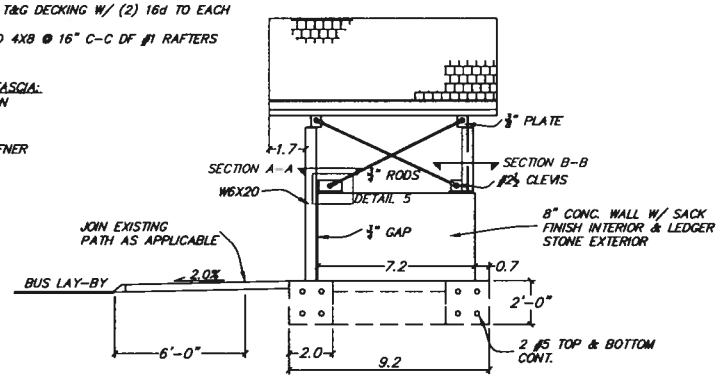

RIGHT-SIDE VIEW

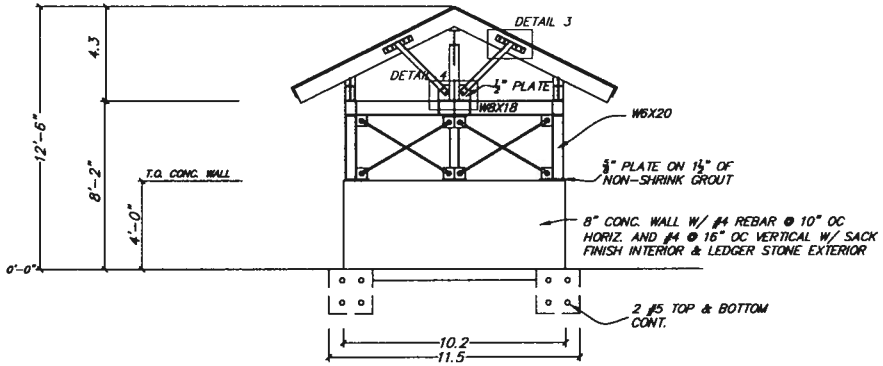

BACK

(11) TYPICAL STRUCTURAL STEEL BUS SHELTER DETAIL 1

N.T.S.

USDA FOREST SERVICE
PACIFIC SOUTHWEST REGION R5

thd/holmes assoc.
civil engineering
land surveying
MAMMOTH LAKES
BISHOP
NAPA
PLEASANTON
REDWOOD CITY
SAN LUIS OBISPO

REGISTERED PROFESSIONAL ENGINEER
RAY EDWARD HOLMES
C 56891
CIVIL
STATE OF CALIFORNIA

COPYRIGHT (C) 2010 BY thd/holmes Associates
All Rights Reserved. This Document is Intended Only for Use on the Project Specified in the Title Block. Any Reproduction of this Document or Portions of this Document, Without the Expressed Written Consent of thd/holmes, is Prohibited

MAMMOTH LAKES

REVIEWED BY:
TOWN OF MAMMOTH LAKES PUBLIC WORKS DEPARTMENT

RAYMOND C. JAYNE 04/10
P.E. 048396

PROJECT
INYO NATIONAL FOREST
LAKE MARY ROAD BIKE PATH COMPLETION PROJECT
STRUCTURAL STEEL BUS SHELTER DETAILS 1

DATE 04/01/10
SCALE AS SHOWN
DRAWN MP
JOB NO. 2008.6
NO. 0.7
SHEET 7 OF 23

GP 08-__

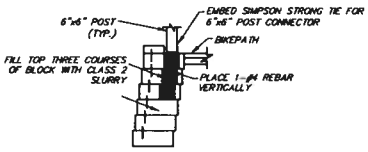

GUARDRAIL & WALL CONNECTION
N.T.S.

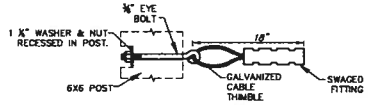

CABLE TERMINATION DETAIL
USE AT ONE END OF EACH SECTION
N.T.S.

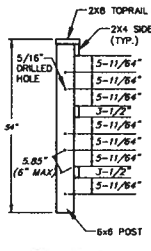

SIDE ELEVATION
N.T.S.

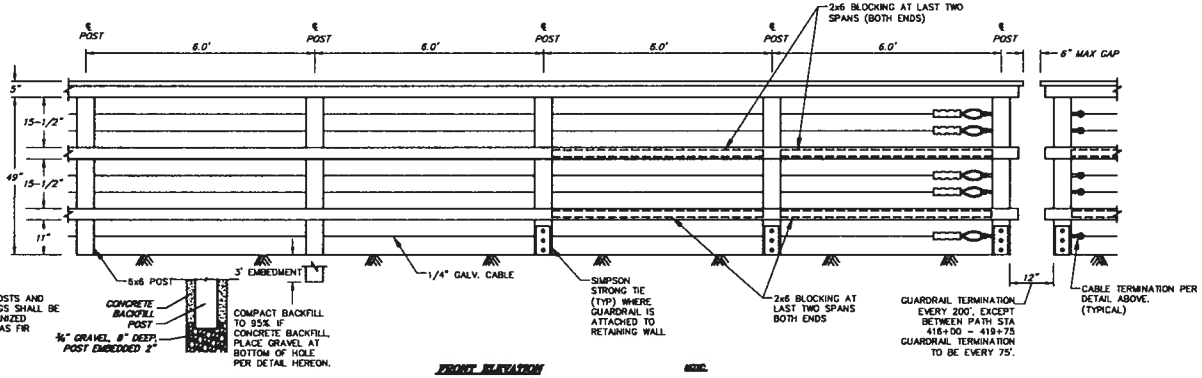

NOTE
ALL POSTS AND RAILINGS SHALL BE WOLMANIZED DOUGLAS FIR

FRONT ELEVATION

NOTE:
RAIL: CABLE SAFETY RAIL SHALL BE ⅜" DIAMETER UNCOATED, TYPE 304 STAINLESS STEEL. EACH CABLE SHALL BE TERMINATED WITH A TYPE 304 STAINLESS STEEL SWAGE FITTING THAT ALLOWS FOR MAINTENANCE TENSIONING. EACH CABLE SHALL BE TENSIONED UNTIL EACH SET OF CABLES CANNOT BE PUSHED APART MORE THAN 6 INCHES.

22 GUARDRAIL DETAIL
N.T.S.

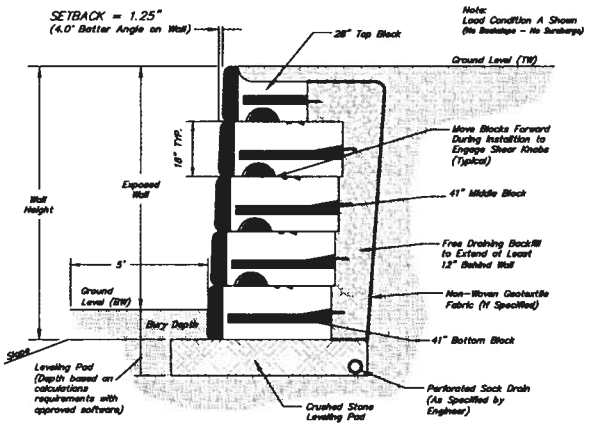

NOTE:
RETAINING WALL INSTALLATION SHALL BE BASED ON SCHEMA WITH APPROVED SOFTWARE AND ENGINEER'S APPROVAL.

12 TYPICAL LARGE BLOCK RETAINING WALL DETAIL
N.T.S.

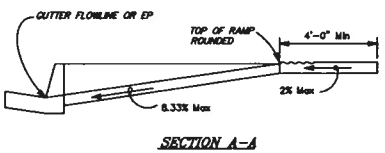

SECTION A-A

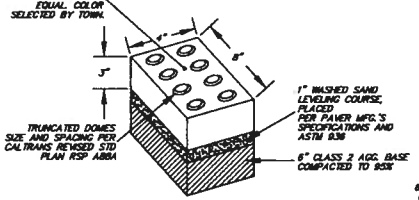

DETECTABLE WARNING PAVER DETAIL

NOTE:
VARIATIONS ON THESE PEDESTRIAN RAMPS MAY BE REQUIRED BASED ON FIELD CONDITIONS AND AS DIRECTED BY ENGINEER.

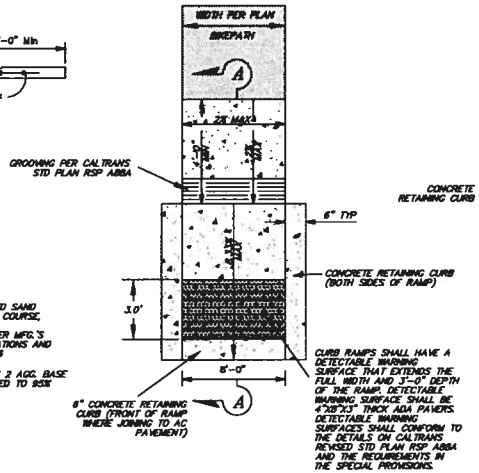

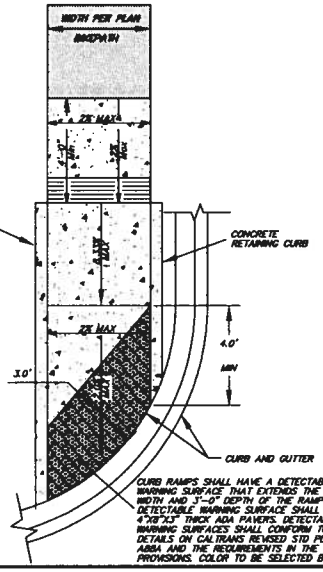

17 PEDESTRIAN RAMP DETAIL
N.T.S.

USDA FOREST SERVICE
PACIFIC SOUTHWEST REGION R5

tho trio/holmes assoc.
civil engineering
land surveying
MAMMOTH LAKES
BISHOP
NAPA
PLEASANTON
REDWOOD CITY
SAN LUIS OBISPO
prepared & submitted by:
REGISTERED PROFESSIONAL ENGINEER
C 56891
CIVIL
STATE OF CALIFORNIA

COPYRIGHT TO 2010 by Trio/Holmes Associates
All Rights Reserved. This Document is Intended Only for Use on the Project Specified in the Title Block. Any Reproduction of this Document or Portions of this Document, Without the Expressed Written Consent of Trio/Holmes, is Prohibited.

MASTER
REVIEWED BY: TOWN OF MAMMOTH LAKES PUBLIC WORKS DEPARTMENT
SUSANNE L. JUNGE DATE
R.E. CHIEF

INYO NATIONAL FOREST
LAKE MARY ROAD BIKE PATH COMPLETION PROJECT
GENERAL DETAILS 2

DATE 04/01/10
SCALE AS SHOWN
DRAWN MP
JOB NO. 2008.6
0.6
SHEET 6 of 25

GP 08-

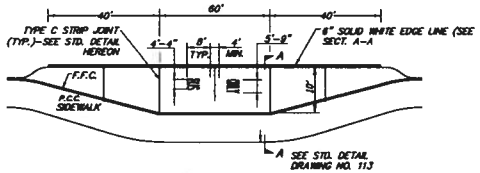

MIDBLOCK BUS TURNOUT PLAN

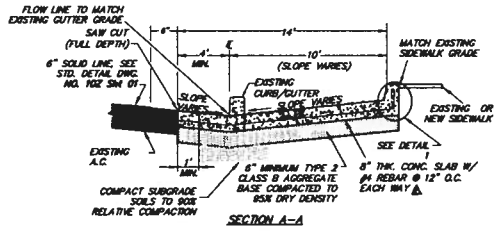

SECTION A-A

BUS TURNOUT STRUCTURAL SECTION

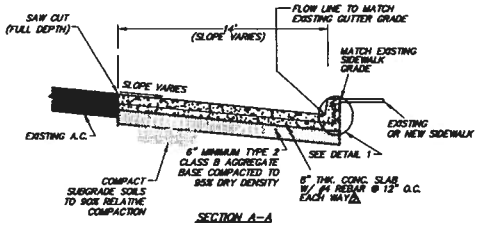

SECTION A-A

BUS TURNOUT STRUCTURAL SECTION

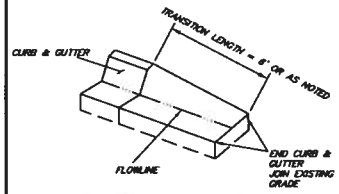

⑤ CURB TRANSITION DETAILS

N.T.S.

VERIFY DETAIL WITH TOWN STANDARDS

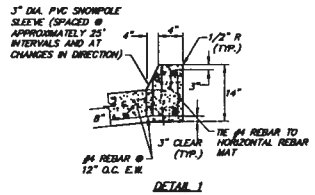

DETAIL 1

⑦ TYPICAL BUS PULLOUT DETAIL

N.T.S.

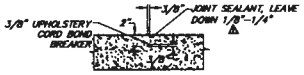

TYPE C-STRIP JOINT

NOTES:

1. TYPE C JOINT SEALERS SHALL BE HOT POURED SUPER SEAL 444 OR EQUAL.
2. FIBER-REINFORCED PORTLAND CEMENT CONCRETE (P.C.C.) SHALL HAVE THE FOLLOWING CHARACTERISTICS: 4000 PSI MIN. COMPRESSIVE STRENGTH @ 28 DAYS, MIN. 6 SACKS OF CEMENT PER CUBIC YARD WITH A MAX. WATER/CEMENT RATIO OF 0.45, AIR ENTRAINMENT 6% ±1.5%, SLUMP AT 1 TO 4 INCHES. ALL MATERIALS SHALL CONFORM TO SSPWC SECTION 202. POLYPROPYLENE FIBERS SHALL BE ADDED TO THE P.C.C. PER THE MANUFACTURER'S RECOMMENDATIONS.

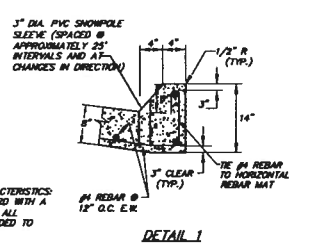

DETAIL 1

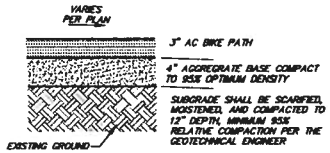

① TYPICAL BIKE PATH PAVEMENT SECTION

N.T.S.

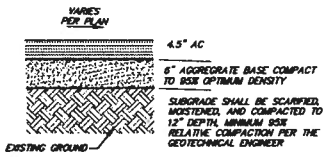

② TYPICAL PAVEMENT SECTION

N.T.S.

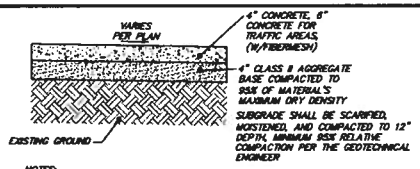

NOTES:
JOINT SHALL BE INSTALLED PER TOWN OF MAMMOTH LAKES STANDARD PLAN 107-D AND 108-D.

⑥ TYPICAL SIDEWALK SECTION

N.T.S.

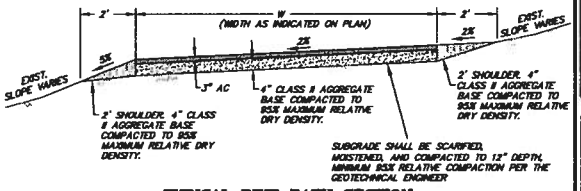

⑦ TYPICAL BIKE PATH SECTION

N.T.S.

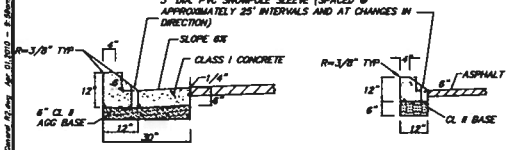

TYPE I CURB AND GUTTER DETAILS

TYPE II CURB DETAILS

GENERAL NOTES FOR CONCRETE CURB AND GUTTER

1. CLASS I CONCRETE WITH FIBER MESH PER MANUFACTURER'S RECOMMENDATIONS, 5% ENTRAINED AIR. SEAL WITH SYNAK OR EQUAL SILICON BASED SEALER.
2. PLACE EXPANSION JOINTS AT 20 FOOT INTERVALS AND AT ALL RETURNS. PLACE CONTROL JOINTS AT 10' CENTERS.
3. EXPANSION JOINT REQUIRED AT ALL STRUCTURES, END OF CURVES, (EC) AND BEGINNING OF CURVES, (BC).
4. SUBGRADE SHALL BE SCARIFIED A MIN. OF 12 INCHES, MOISTURE CONDITIONED, AND COMPACTED TO A MIN. OF 95% RELATIVE COMPACTION.
5. TOP AND FACE OF CURB SHALL BE TROWLED SMOOTH AND FINISHED WITH A FINE BRUSH.
6. GUTTERS SHALL NOT VARY MORE THAN 1/8 INCH FROM TRUE GRADE.

③④ TYPICAL CURB & GUTTER DETAILS

N.T.S.

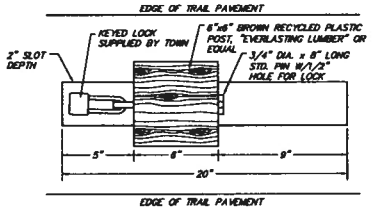

SLOT DETAIL

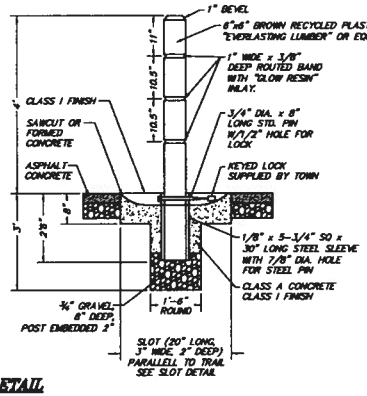

㉑ BOLLARD DETAIL

N.T.S.

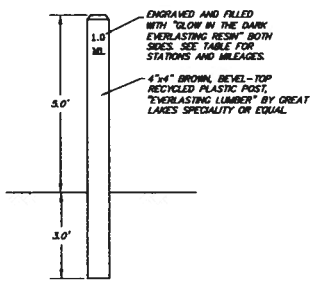

MILEAGE POST MARKER DETAIL

N.T.S.

USDA FOREST SERVICE

PACIFIC SOUTHWEST REGION R5

tha tridd/holmes assoc. civil engineering land surveying

MAMMOTH LAKES
BISHOP
NAPA
PLEASANTON
REDWOOD CITY
SAN LUIS OBISPO

PREPARED & SUBMITTED BY:

REGISTERED PROFESSIONAL ENGINEER RYAN EDWARD ROTH C 56891 CIVIL STATE OF CALIFORNIA

DATE:

COPYRIGHT (C) 2010 by Tridd/Holmes Associates, All Rights Reserved. This Document is Intended Only for Use on the Project Specified in the Title Block. Any Reproduction of this Document or Portions of this Document, Without the Expressed Written Consent of Tridd/Holmes, is Prohibited.

REVIEWED BY: TOWN OF MAMMOTH LAKES PUBLIC WORKS DEPARTMENT

MARGARET C. JAMES DATE
R.E. CIVIL

PROJECT: INYO NATIONAL FOREST
PROJECT NAME: LAKE MARY ROAD BIKE PATH COMPLETION PROJECT
DRAWING TITLE: GENERAL DETAILS 1
DRAWING NO.:

DATE	04/01/10
SCALE	AS SHOWN
DRAWN	MP
DATE SUB.	2008.6
SHEET	0.5
SHEET 5 OF 23	

CP 08-—

F:\01 Mammoth\2008-8\proof\Improvement plans\dwg\2008-4 GD General 01.dwg Apr 01,2010 - 8:38am, mpatterson

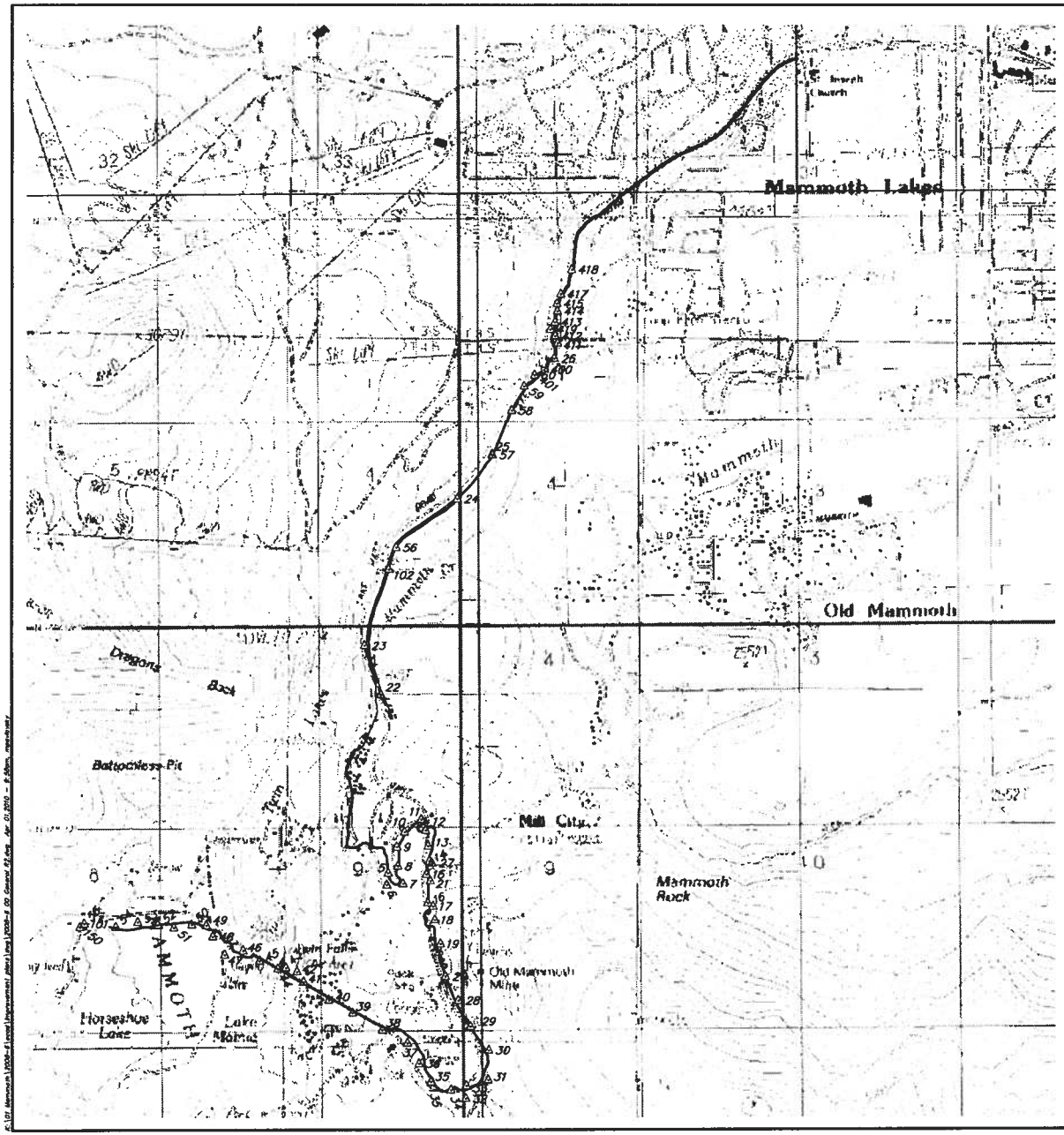

PT	NORTHING	EASTING	ELEVATION	DESCRIPTION
5	N2049851.447650	E6994615.706580	8633.711385	SET 60D
6	N2049670.196240	E6994595.852720	8631.415750	SET MAG NAIL
7	N2049689.564480	E6994839.294440	8650.099983	SET 60D
8	N2049954.150210	E6994763.060540	8661.113830	SET 60D
9	N2050240.820920	E6994747.286960	8658.286615	SET 60D
10	N2050459.788680	E6994864.413060	8666.291972	SET 60D
11	N2050647.469660	E6995114.513350	8687.551394	SET 60D
12	N2050485.295110	E6995180.734950	8698.577805	SET 60D
13	N2050252.731920	E6995216.693130	8699.737370	SET 60D
14	N2050026.910770	E6995233.921500	8737.274110	SET 60D
15	N2049831.616330	E6995191.839000	8740.286042	SET 60D
16	N2049403.613940	E6995212.909230	8764.975581	SET 60D BELOW
17	N2049353.623440	E6995291.487640	8786.388097	SET 60D
18	N2049153.021700	E6995315.855270	8798.747567	SET 60D
19	N2048794.223660	E6995401.583890	8821.648782	SET 60D
20	N2048311.586400	E6995473.806500	8849.800000	CP PACK
21	N2049730.646000	E6995251.743100	8762.910000	CP OMR
22	N2052516.785300	E6994509.087500	8599.540000	CP TAMRCK
23	N2053254.158700	E6994260.156600	8594.160000	CP BRIDGE
24	N2055453.265600	E6995653.011300	8456.770000	CR LMR GATE
25	N2056107.190000	E6996172.883500	8414.190000	CR LMR TOUT
26	N2057546.484800	E6997110.527600	8328.560000	CR JUN
27	N2050001.809025	E6995273.586224	8746.213408	SET CP 60D
28	N2047956.476051	E6995665.917315	8860.492588	SET 60D CP
29	N2047568.510120	E6995845.859843	8870.520638	SET 60D CP
30	N2047217.718047	E6996121.929561	8878.313319	SET 60D CP
31	N2046778.325024	E6996111.388320	8892.534263	SET 60D CP
32	N2046504.436503	E6995775.641140	8913.414125	60D SET
33	N2046694.041005	E6995783.902817	8889.242186	SET 60D CP 33
34	N2046632.855480	E6995551.210798	8910.967768	SET 60D CP34
35	N2046749.467932	E6995251.591552	8927.003437	60D CP
36	N2047018.656932	E6995073.053857	8927.387092	60D SET CP
37	N2047325.257874	E6994899.534285	8927.838055	60D SET CP
38	N2047520.445903	E6994523.134467	8931.332120	60D SET CP
39	N2047770.139000	E6994078.872900	8918.254000	60D SET
40	N2047965.599396	E6993723.386618	8908.205489	60D SET
41	N2048230.244690	E6993344.783636	8916.997015	SET 60D CP KNOLL
42	N2048380.451121	E6993245.866532	8905.690250	SET 60D CP
43	N2048439.416107	E6993080.199751	8901.112340	SET 60D CP
44	N2048423.418700	E6992957.903800	8912.700000	SET 60D CP
45	N2048540.726744	E6992685.233599	8925.411351	SET 60D CP45
46	N2048693.523050	E6992437.383852	8928.090381	SET 60D
47	N2048631.262724	E6992161.596520	8935.701660	SET 60D
48	N2048900.226672	E6991984.347454	8940.549952	SET 60D CP48
49	N2049067.179693	E6991886.724943	8952.772180	60D SET
50	N2049080.657301	E6991668.037495	8950.523495	SET 60D CP50
51	N2049035.632703	E6991402.408244	8952.955591	set 60d cp51
52	N2049077.344762	E6991162.969943	8964.700872	set 60d cp52
53	N2049116.598216	E6990860.499136	8975.188365	set 60d cp53
54	N2049045.016801	E6990531.810906	8971.229581	SET 60D CP54
55	N2049097.299306	E6990057.766725	8974.114103	FND 60D
56	N2054727.048000	E6994736.567000	8513.517000	60D SET
57	N2056101.734576	E6996183.499446	8414.793607	60D SET
58	N2056763.458426	E6996470.823266	8378.389444	SET 60D CP58
59	N2057127.744482	E6996656.842726	8358.154989	SET 60D CP59
60	N2057299.773956	E6996815.965886	8346.585898	FNDMAGNL AKA 401
100	N2049042.110000	E698998.360000	8976.680000	JW PK GPS
101	N2049097.296100	E6990060.565300	8974.440000	RW 60D GPS
102	N2054400.477300	E6994624.621200	8532.000000	RW 60D GPS
135	N2046749.473753	E6995251.576595	8926.993931	SET 60D CP35
150	N2049042.136797	E6989995.458647	8976.298394	FND CONC NAIL
400	N2057378.097700	E6996957.605000	8337.010000	60D CP
401	N2057298.235200	E6996815.819100	8345.970000	SET PK
411	N2057776.713500	E6997160.528000	8303.760000	60D CP
412	N2057882.396900	E6997124.674400	8291.170000	60D CP
413	N2058092.724700	E6997118.902900	8292.770000	SET 60D
414	N2058260.277500	E6997158.453600	8282.920000	60D CP
415	N2058370.754900	E6997149.514800	8288.910000	60D CP
417	N2058515.528600	E6997207.242300	8280.440000	CUT SPK CP
418	N2058887.267300	E6997373.042300	8262.250000	CUT SPK CP
419	N2057981.278700	E6997049.498500	8309.750000	MAGNAIL CP

USDA FOREST SERVICE

PACIFIC SOUTHWEST REGION R5

thd/holmes assoc.
civil engineering
land surveying

MAMMOTH LAKES
BISHOP
NAPA
PLEASANTON
REDWOOD CITY
SAN LUIS OBISPO

C 56891

Copyright (C) 2010 by thd/Holmes Associates. All Rights Reserved. This Document is Intended Only for Use on the Project Specified in the Title Block. Any Reproduction of this Document or Portions of this Document, Without the Expressed Written Consent of thd/Holmes, is Prohibited.

REVIEWED BY:
TOWN OF MAMMOTH LAKES PUBLIC WORKS DEPARTMENT

PROJECT: INYO NATIONAL FOREST
TRUE NAME: LAKE MARY ROAD BIKE PATH COMPLETION PROJECT
SURVEY CONTROL

DATE: 04/01/10
SCALE: AS SHOWN
DRAWN: MP
DATE: 2008.6
0.4
SHEET 4 OF 25

CP 08-__

CONSTRUCTION NOTES

1. INSTALL BIKE PATH, 3" AC ON 4" CLASS 2 BASE, PER TYPICAL SECTION ON DRAWING 0.5.
2. INSTALL BUS STOP PER TYPICAL DETAIL ON DRAWING 0.5.
3. INSTALL TYPE I CURB AND GUTTER PER TOWN OF MAMMOTH LAKES STANDARD PLAN 102-0 AND DETAIL ON DRAWING 0.5.
4. INSTALL TYPE II CURB PER TOWN OF MAMMOTH LAKES STANDARD PLAN 102-0 AND DETAIL ON DRAWING 0.5.
5. INSTALL TRANSITION CURB PER TOWN OF MAMMOTH LAKES STANDARD PLAN 102-00. AND DETAIL ON DRAWING 0.5.
6. CONSTRUCT CONCRETE SIDEWALK PER TOWN OF MAMMOTH LAKES REQUIREMENTS AND DETAIL ON DRAWING 0.5.
7. SAWCUT AND REMOVE EXISTING AC.
8. INSTALL SIGN PER TOWN OF MAMMOTH LAKES REQUIREMENTS AND CALTRANS (C) OR MUTCD (M) DESIGNATION AS INDICATED ON PLANS. REFER TO SIGN KEY DRAWING 0.3.
9. INSTALL HANDICAPPED SIGN AND PAINT STALLS PER TOWN OF MAMMOTH LAKES REQUIREMENTS.
10. INSTALL CABLE GUARDRAIL PER CALTRANS STANDARD PLAN B11-47.
11. INSTALL BUS SHELTER PER TOWN OF MAMMOTH LAKES REQUIREMENTS AND DETAIL ON DRAWINGS 0.7-0.10.
12. CONSTRUCT RETAINING WALL PER DETAIL ON DRAWING 0.6.
13. PAINT STRIPING PER TOWN OF MAMMOTH LAKES STANDARD PLAN 400-0.
14. REMOVE EXISTING FACILITY/TREES. TREE SIZE INDICATED ON PLAN.
15. PAINT STOP BAR, 12" WHITE PER SPECIFICATIONS. MINIMUM 2 COATS.
16. PAINT CROSS WALK 10' WIDE; 12" WIDE WHITE STRIPES AT 45° ANGLE SEPARATED BY 12" GAPS.
17. INSTALL PEDESTRIAN RAMP PER TOWN OF MAMMOTH LAKES STANDARD PLAN 103-0, CALTRANS STANDARD PLANS A88A AND A88B, AND DETAIL ON DRAWING 0.6.
18. RESTORE EXISTING WALKING SURFACE ALONG EXISTING ALIGNMENT PER DETAIL ON SHEET 7.1. (APPROXIMATE LENGTH = 152').
19. PROTECT EXISTING FACILITY IN PLACE.
20. RELOCATE BOULDERS AS DIRECTED BY ENGINEER.
21. INSTALL REMOVABLE BOLLARD PER TOWN OF MAMMOTH LAKES REQUIREMENTS AND DETAIL ON DRAWING 0.5.
22. INSTALL 4.5 HIGH GUARDRAIL PER DETAIL ON DRAWING 0.6.
23. INSTALL SELF WEATHERING STEEL METAL BEAM GUARDRAIL PER CALTRANS STANDARD PLAN A77A1.
24. RELOCATE EXISTING FACILITY.
25. INSTALL PREFABRICATED SELF-WEATHERING STEEL BRIDGE WITH TREATED WOOD DECKING AND TREX RAILINGS, PER MANUFACTURER'S RECOMMENDATIONS, SPECIFICATIONS, AND DETAIL ON SHEET 6.4. LENGTH (L_1) = 80' AND INSIDE CLEAR WIDTH (W) = 10'
26. CONSTRUCT CURB SIDEWALK CROSS DRAIN PER TOWN OF MAMMOTH LAKES STANDARD PLAN 109-0. MODIFY TO 36" WIDTH AND SLOPE TO DRAIN TO BACK OF WALK.
27. DESIGN/BUILD SOIL NAIL RETAINING WALL PER SPECIFICATIONS. FINISH WITH BOULDERSCAPE SCULPTED SHOTCRETE FINISH PER DETAIL ON DRAWING 6.5.
28. INSTALL BOX CULVERT PER MANUFACTURER'S RECOMMENDATIONS, SPECIFICATIONS, AND DETAIL ON DRAWING 6.5.
29. REALIGN PORTION OF EXISTING DIRT ACCESS FROM BACK OF WALK, 12' WIDE; JOIN TO EXISTING PER PLAN (APPRX LENGTH = 75'
30. TRANSITION FROM 8' WIDE PATH TO 10' WIDE PATH.
31. CONSTRUCT CONCRETE PAD, 6' WIDE.
32. FORM CONCRETE STEPS, 12" TREAD, 6" RISE.
33. INSTALL WOOD POST PER TOWN OF MAMMOTH LAKES STANDARD DETAIL 802-0.
34. ABANDON EXISTING 12" WATERLINE IN PLACE AND REPLACE WITH NEW 12" DIP WATERLINE. COORDINATE WITH MAMMOTH COMMUNITY WATER DISTRICT.
35. INSTALL ASPHALT CONCRETE PAVEMENT, 4.5" AC ON 6" CLASS 2 BASE, PER TYPICAL SECTION ON DRAWING 0.5.
36. INSTALL 24" CULVERT WITH A MINIMUM 1' COVER BELOW THE PATH.
37. CONSTRUCT 3' WIDE, 6" DEEP VEGETATIVE SWALE.
38. INSTALL 6"-8" RIP RAP.
39. INSTALL 18" CULVERT WITH A MINIMUM 1' COVER BELOW THE PATH.
40. INSTALL 24"X36" PRECAST INLET WITH TRAFIC RATED GRATE.
41. INSTALL TUNNEL LIGHTING SYSTEM PER SPECIFICATION SECTION 86.

SIGN KEY

FULL SIZED SIGNS SHALL BE USED ON ROADS. REDUCED SIZED SIGNS SHALL BE USED ON BIKEPATH

CALTRANS DESIGNATION	MUTCD DESIGNATION	TYPE	REDUCED SIZE
W15	W11-7	HORSE SYMBOL	8"X8"
W79	W11-1	BIKE SYMBOL	TOWL SIGN 4
W54A	W11-2	PEDESTRIAN SYMBOL	TOWL SIGN 1
–	W16-9P	AHEAD	4"X8"
–	D8-1	SCENIC OVERLOOK	8"X12"
W1	W1-1	TURN	TOWL SIGN 7
W79A	W16-1	SHARE THE ROAD	–
G93	D11-1	BIKE ROUTE	4"X8"
G93A	M4-11	BEGIN – GREEN	4"X8"
G93B	M4-12	END	4"X8"
R81	–	BIKE LANE WITH BIKE SYMBOL	8"X12"
R81A	–	BEGIN – WHITE	4"X8"
G54	M6-1	DIRECTIONAL ARROW AUXILIARY	4"X12"
–	R5-6	BICYCLES PROHIBITED	8"X8"
–	D1-1	DESTINATION – ONE	8"X12"
–	D1-2	DESTINATION – TWO	8"X12"
–	R4-7a	KEEP RIGHT	8"X8"
R1-2	R1-2	YIELD	11"X11"X11"
R1-1	R1-1	STOP	TOWL SIGN 2
R11	R5-1	DO NOT ENTER	–

NOTE: ADJUST TRAIL TO MAINTAIN SUFFICIENT SEPARATION FROM EXISTING TREES AND UTILITIES WHICH ARE TO REMAIN IN PLACE

LEGEND:

- PROPERTY LINE
- EXISTING CONTOUR (1' INTERVAL)
- EXISTING EDGE OF PAVEMENT
- EX. SEWER LINE
- EX. WATER LINE
- NEW PAVEMENT
- FINISHED GRADE RATE
- FINISHED SURFACE ELEVATION
- EXISTING GROUND ELEVATION
- NEW SIDEWALK
- STORM DRAIN DROP INLET
- STORM DRAIN CLEANOUT
- STORM DRAIN PIPE, SIZE AND RATE
- EARTH SWALE
- EXISTING TREE TYPE & SIZE P=PINE/F=FIR/S=SNAG
- TREE TO BE REMOVED, TYPE & SIZE P=PINE/F=FIR/S=SNAG
- LARGE BLOCK RETAINING WALL
- SOIL NAIL RETAINING WALL
- GUARDRAIL

USDA FOREST SERVICE
PACIFIC SOUTHWEST REGION R5

Wood/Holmes assoc. civil engineering land surveying
MAMMOTH LAKES
BISHOP
NAPA
PLEASANTON
REDWOOD CITY
SAN LUIS OBISPO
PREPARED & SUBMITTED BY
REGISTERED PROFESSIONAL ENGINEER NICHOLAS EDWARD MOYER C 56891 CIVIL STATE OF CALIFORNIA
DATE:

Copyright (c) 2010 W/H Wood/Holmes Associates All Rights Reserved. This Document is Intended Only for Use on the Project Specified in the Title Block. Any Reproduction of this Document or Portions of this Document, Without the Expressed Written Consent of Wood/Holmes, is Prohibited

REVIEWED BY:
TOWN OF MAMMOTH LAKES PUBLIC WORKS DEPARTMENT
MAMMOTH C. JONES 04/01 R.E. 043019

PROJECT: INYO NATIONAL FOREST
TRAILHEAD: LAKE MARY ROAD BIKE PATH COMPLETION PROJECT
CONSTRUCTION NOTES AND LEGEND

DATE: 04/01/10
SCALE: AS SHOWN
DRAWN: MP
DESIGN: 2008.6
0.3
SHEET 3 OF 25

CP 08-__

C:\Old Mammoth\2008-8\proof\Improvement plans\dwg\0008-8 00 General 03.dwg Apr 01,2010 - 8:57am, mpodowsky

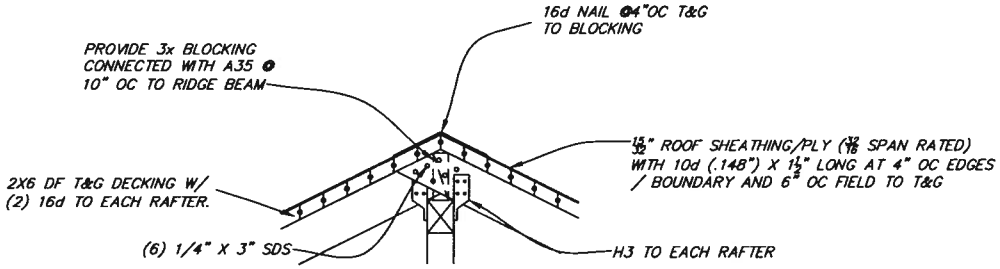

ROOFING DETAIL
NTS

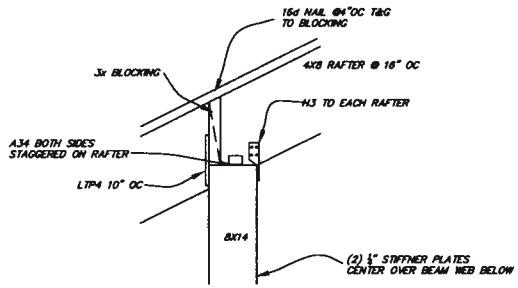

⑪ TYPICAL TIMBER BUS SHELTER DETAIL 4
N.T.S.

USDA FOREST SERVICE
PACIFIC SOUTHWEST REGION R5

MAMMOTH LAKES
BISHOP
NAPA
PLEASANTON
REDWOOD CITY
SAN LUIS OBISPO

INYO NATIONAL FOREST
LAKE MARY ROAD BIKE PATH COMPLETION PROJECT
TIMBER BUS SHELTER DETAILS 4

DATE 04/01/10
SCALE AS SHOWN
DESIGN MP
2008.6
0.14
SHEET 14 of 25

GP 08-__

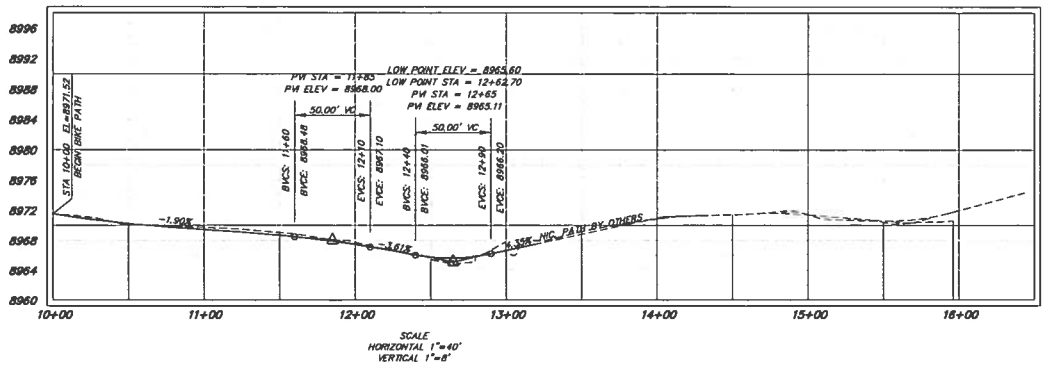

CURVE TABLE			
CURVE	LENGTH	RADIUS	Delta
C1	161.03	155.00	59°31'24"
C2	29.11	150.00	11°07'09"
C3	17.45	50.00	19°59'34"
C4	54.81	50.00	62°48'15"
C5	27.06	50.00	31°00'31"

LINE TABLE		
LINE	LENGTH	BEARING
L1	30.55	S79°13'28"E

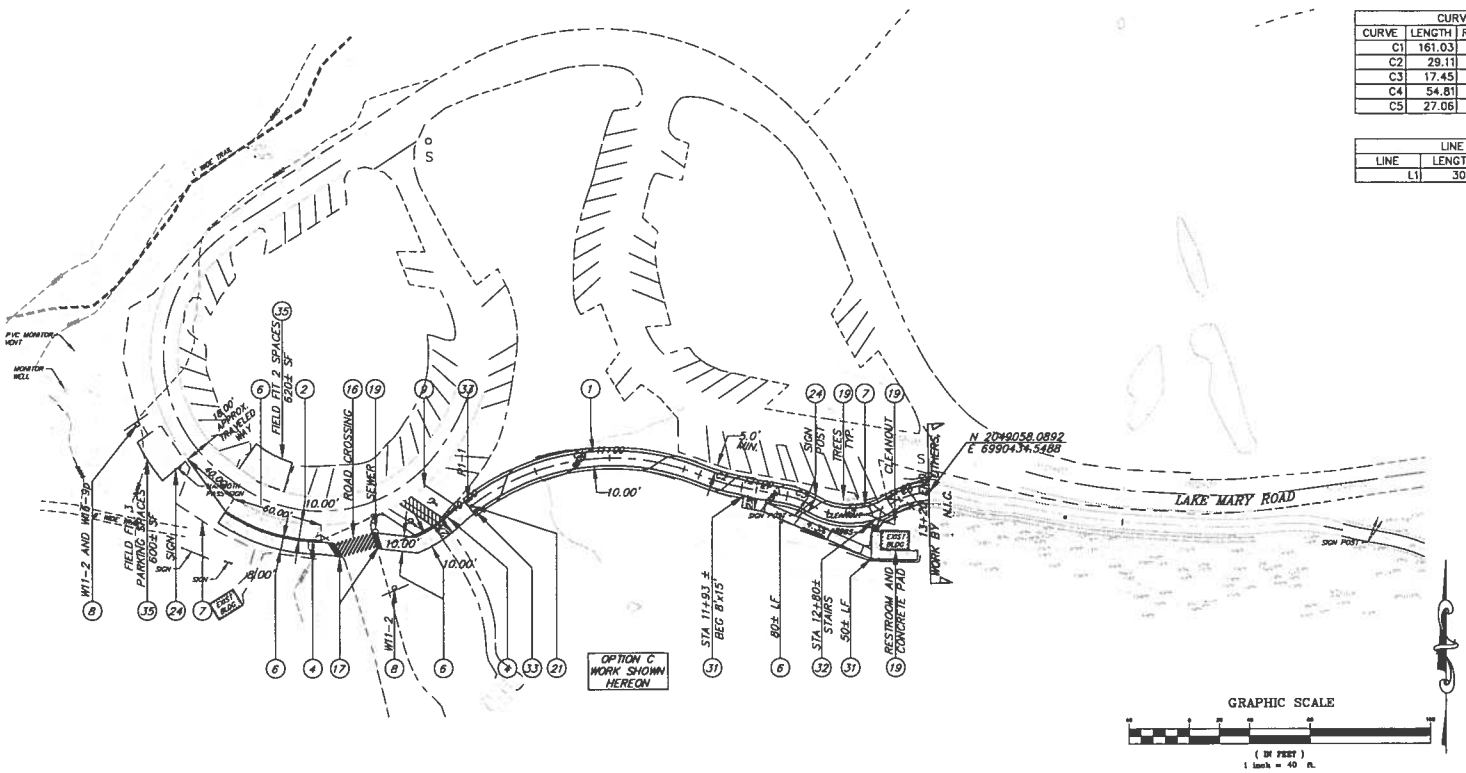

EARTHWORK	
CUT:	90 CY
FILL:	30 CY
NET CUT:	60 CY

USDA FOREST SERVICE

PACIFIC SOUTHWEST REGION R5

triad/holmes assoc.
civil engineering
land surveying

MAMMOTH LAKES
BISHOP
NAPA
PLEASANTON
REDWOOD CITY
SAN LUIS OBISPO

PREPARED & SUBMITTED BY:

REGISTERED PROFESSIONAL ENGINEER
PAUL EDWARD ROTEN
C 56891
CIVIL
STATE OF CALIFORNIA

DATE:

Copyright (C) 2010 by Triad/Holmes Associates All Rights Reserved. This Document is Intended Only for Use on the Project Specified in the Title Block. Any Reproduction of this Document or Portions of this Document, Without the Expressed Written Consent of Triad/Holmes, is Prohibited.

MAMMOTH LAKES

REVIEWED BY:
TOWN OF MAMMOTH LAKES PUBLIC WORKS DEPARTMENT

RAYMOND C. JARVIS DATE
P.E. C43318

FOREST: INYO NATIONAL FOREST

PROJECT NAME: LAKE MARY ROAD BIKE PATH COMPLETION PROJECT

DRAWING NAME: HORSESHOE LAKE PLAN AND PROFILE

DATE	04/01/10
SCALE	AS SHOWN
DRAWN	KP/TS/MP
JOB NO.	2008.6
DWG	1.1
SHEET	15 of 25

GP 09-__

K:\2008-6\LACAD\Working Drawings\2008-6 01 Horseshoe R2.dwg Apr 01,2010 - 2:10pm, kpadgett

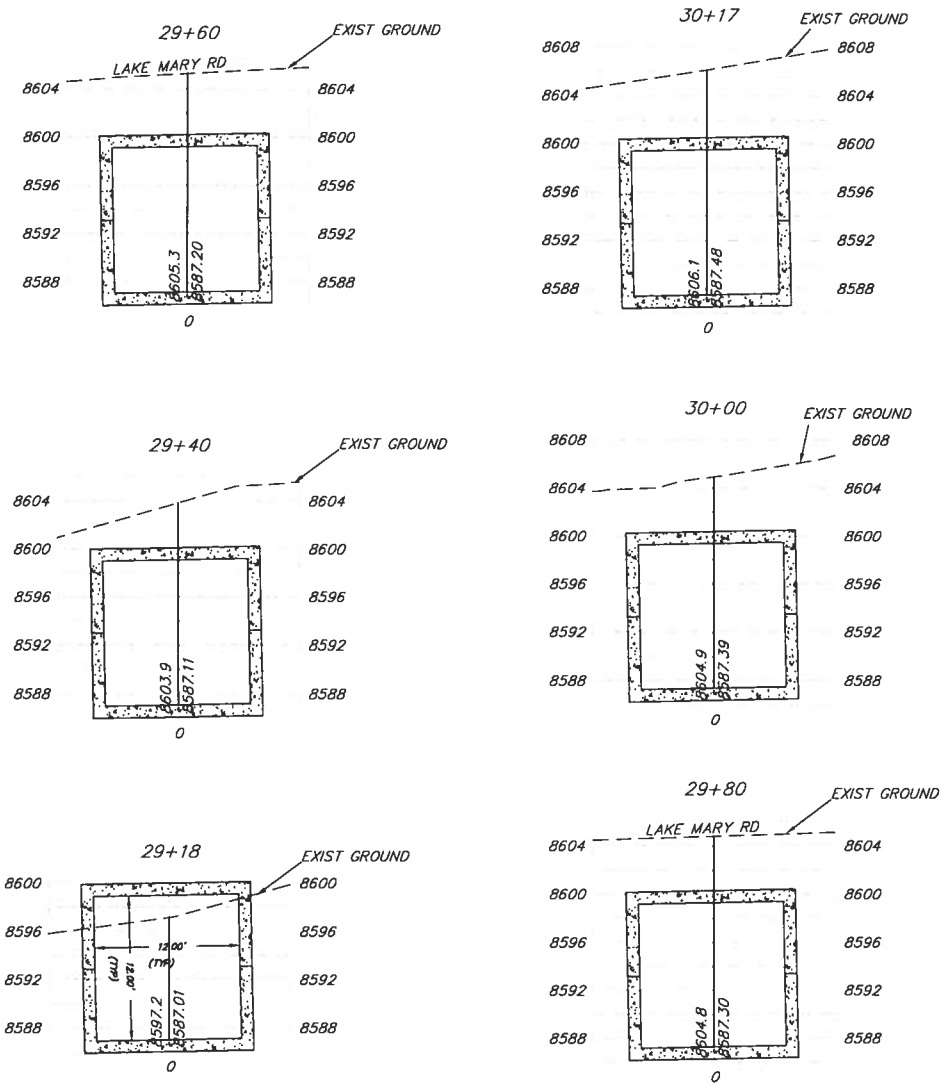

BOX CULVERT SECTIONS
SCALE: 1" = 5'

BASE BID
WORK SHOWN HEREON

NOTES:

1. EXCAVATION, BACKFILL AND COMPACTION AROUND THE CULVERT SHALL BE CONSTRUCTED IN SIMULTANEOUS EQUAL LIFTS ON BOTH SIDES OF THE CULVERT SO AS TO MINIMIZE UNBALANCED LOADS EXERTED ON ANY PORTION OF THE CULVERT.

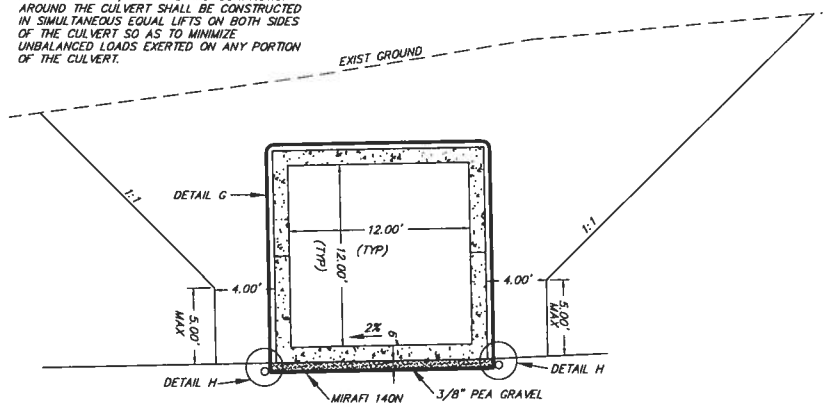

TYPICAL BOX CULVERT DETAIL
SCALE: 1" = 4'

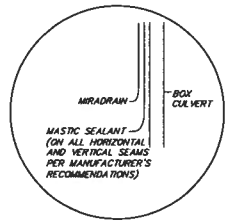

DETAIL G
WATERPROOFING

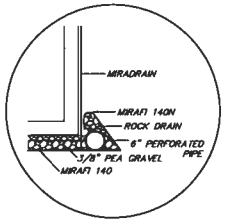

DETAIL H
WALL DRAIN

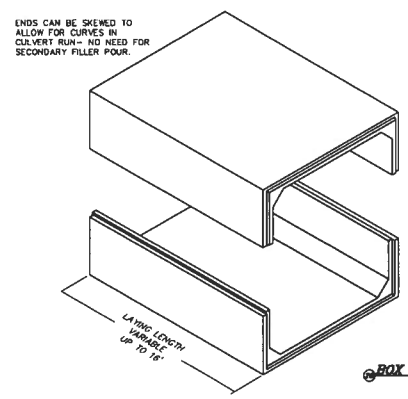

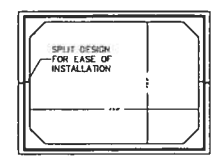

STANDARD DESIGNS MEET AASHTO HS-20 TRAFFIC LOADS IN ACCORDANCE WITH ASTM C1433, ACI 318 AND AASHTO SPECIFICATIONS.

DESIGNS BASED ON SPECIAL LOADINGS OR DEPTHS OF BURY ARE AVAILABLE ON REQUEST. CUSTOM COMPONENTS CAN BE ENGINEERED WITH OPENINGS, DOWELS, AND SKEWS. CUSTOM HEIGHTS AVAILABLE IN 1/2" INCREMENTS.

FOR COMPLETE DESIGN AND PRODUCT INFORMATION CONTACT JENSEN PRECAST.

BOX CULVERT

USDA FOREST SERVICE
PACIFIC SOUTHWEST REGION R5

trlad/holmes assoc.
civil engineering land surveying
MAMMOTH LAKES
BISHOP
NAPA
PLEASANTON
REDWOOD CITY
SAN LUIS OBISPO
PREPARED & SUBMITTED BY:
REGISTERED PROFESSIONAL ENGINEER
PAUL EDWARD ROTEN
C 56891
CIVIL
STATE OF CALIFORNIA
DATE:

Copyright (C) 2010 by Trlad/Holmes Associates. All Rights Reserved. This Document is Intended Only for Use on the Project Specified in the Title Block. Any Reproduction of this Document or Portions of this Document, Without the Expressed Written Consent of Trlad/Holmes, is Prohibited.

REVIEWED BY:
TOWN OF MAMMOTH LAKES PUBLIC WORKS DEPARTMENT
RAYMOND C. JARVIS DATE
P.E. C62318

PROJECT: INYO NATIONAL FOREST
PROJECT NAME: LAKE MARY ROAD BIKE PATH COMPLETION PROJECT
DRAWING NAME: TAMARACK REALIGNMENT TUNNEL DETAILS 2

DATE: 04/01/10
SCALE: AS SHOWN
DRAWN: MP
JOB NO.: 2008.6
DWG: 6.6
SHEET 24 OF 25

GP 09-__

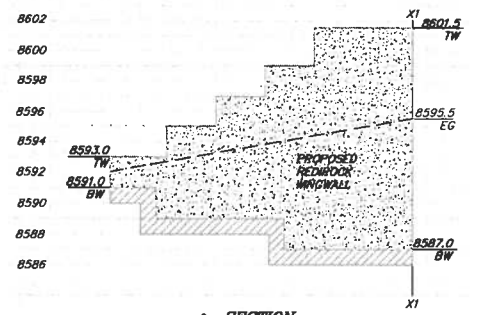

SECTION WINGWALL

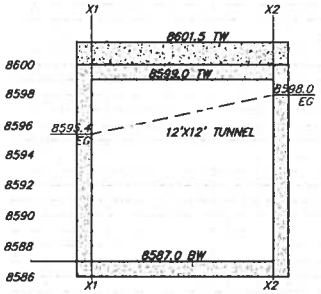

SECTION HEADWALL

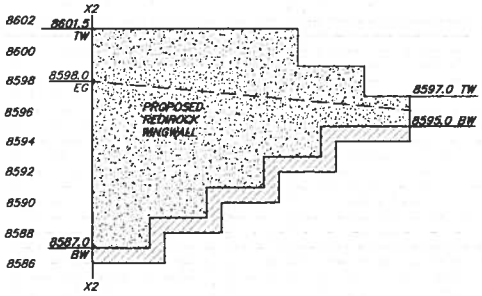

SECTION WINGWALL

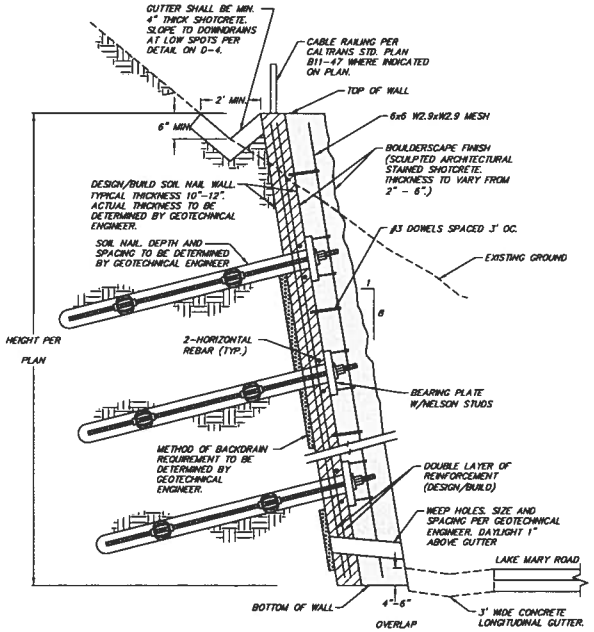

SOIL NAIL WALL
N.T.S.

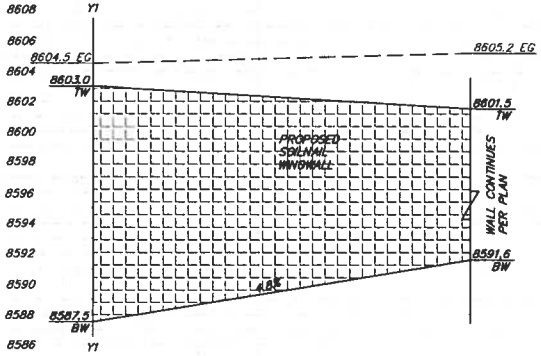

SECTION WINGWALL

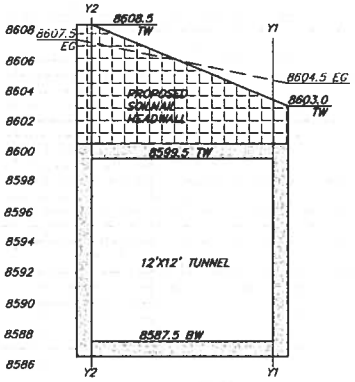

SECTION HEADWALL

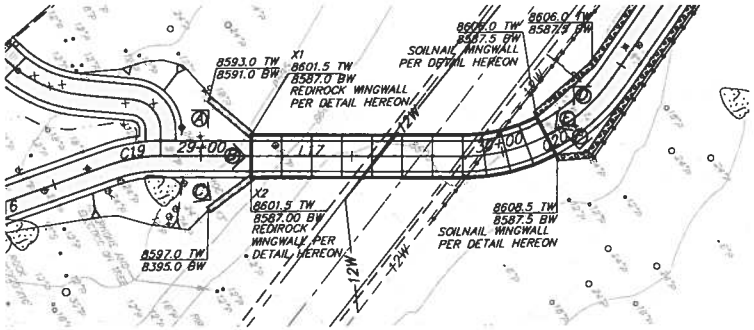

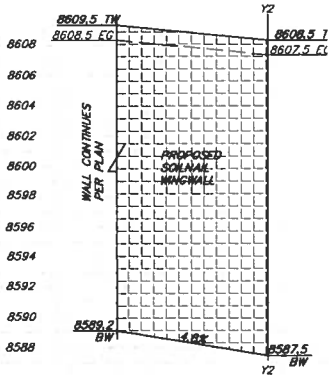

SECTION WINGWALL

GRAPHIC SCALE

(IN FEET)
1 inch = 50 ft.

BASE BID
WORK SHOWN HEREON

USDA FOREST SERVICE

PACIFIC SOUTHWEST REGION R5

tha
tried/holmes assoc.
civil engineering
land surveying

MAMMOTH LAKES
BISHOP
NAPA
PLEASANTON
REDWOOD CITY
SAN LUIS OBISPO

PREPARED & SUBMITTED BY:

REGISTERED PROFESSIONAL ENGINEER
RYAN EDWARD ROTH
C 56891
CIVIL
STATE OF CALIFORNIA

DATE:

Copyright (C) 2010 by Tried/Holmes Associates, All Rights Reserved. This Document is Intended Only for Use on the Project Specified in the Title Block. Any Reproduction of this Document or Portions of this Document, Without the Expressed Written Consent of Tried/Holmes, is Prohibited.

MAMMOTH LAKES

REVIEWED BY:
TOWN OF MAMMOTH LAKES PUBLIC WORKS DEPARTMENT

RAYMOND C. JARVIS DATE
R.E. C43318

PROJECT: INYO NATIONAL FOREST
PROJECT NAME: LAKE MARY ROAD BIKE PATH COMPLETION PROJECT
DRAWING NAME: TAMARACK REALIGNMENT TUNNEL DETAILS 1

DATE: 04/01/10
SCALE: AS SHOWN
DRAWN: MP
JOB NO.: 2008.6
DWG: 6.5
SHEET 23 OF 25

GP 09-__

R:\01 Mammoth\2006-8\cad\improvement plans\dwg\2006-8 08 Tamarack R2.dwg Apr 01,2010 - 10:34am, mpatrick

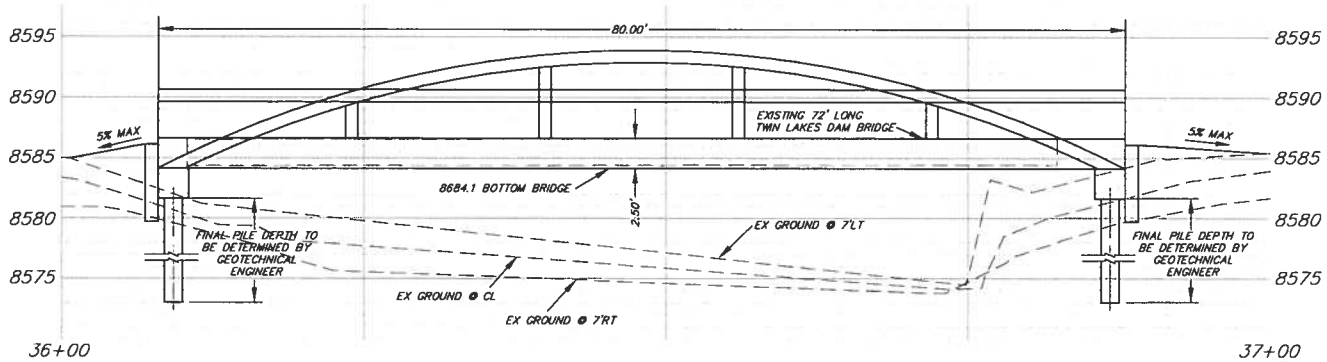

PROFILE
SCALE: 1" = 5'

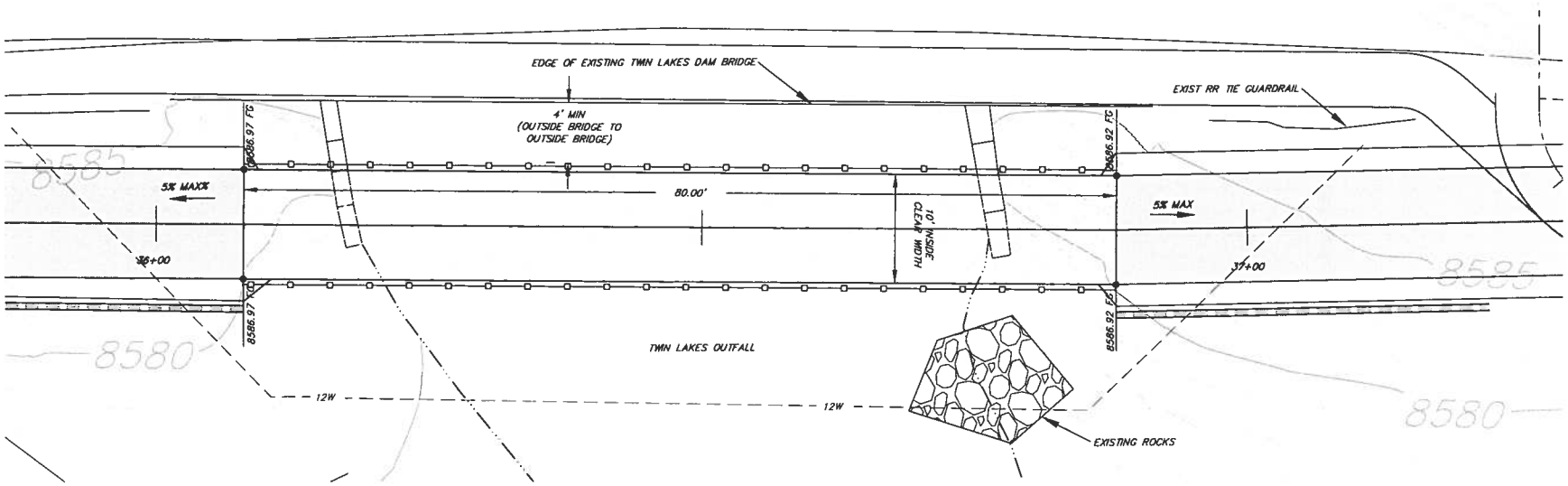

PLAN
SCALE: 1" = 5'

BRIDGE DETAILS

BASE BID
WORK SHOWN HEREON

BRIDGE NOTES:

1. TWIN LAKES DAM BRIDGE AND FOUNDATIONS SHALL BE PROTECTED IN PLACE.
2. PIER LOCATIONS SHALL BE ADJUSTED AS NECESSARY TO ALLOW A MINIMUM OF 5' CLEARANCE TO EXISTING WATER LINE.
3. BOTTOM ELEVATION OF THE NEW BRIDGE SHALL MATCH THE BOTTOM ELEVATION OF THE EXISTING TWIN LAKES DAM BRIDGE.
4. NEW BRIDGE SHALL BE PLACED TO HAVE A MINIMUM CLEARANCE OF 5' TO THE EXISTING TWIN LAKES DAM BRIDGE
5. EXISTING WATER LINE SHALL BE POTHOLED PRIOR TO ORDERING THE BRIDGE AND CONSTRUCTION OF FOUNDATION.

USDA
FOREST
SERVICE

PACIFIC
SOUTHWEST
REGION
R5

tha
triad/holmes assoc.
civil engineering
land surveying
MAMMOTH LAKES
BISHOP
NAPA
PLEASANTON
REDWOOD CITY
SAN LUIS OBISPO

PREPARED & SUBMITTED BY:
MARK EDWARD ROTH
C 56891
CIVIL
STATE OF CALIFORNIA
DATE

Copyright (C) 2010 by Triad/Holmes Associates
All Rights Reserved. This Document is Intended Only for Use on the Project Specified in the Title Block. Any Reproduction of this Document or Portions of this Document, Without the Expressed Written Consent of Triad/Holmes, is Prohibited.

REVIEWED BY:
TOWN OF MAMMOTH
LAKES PUBLIC WORKS
DEPARTMENT

APPROVED C. MAYNS DATE
T.E. 042310

PROJECT: INYO NATIONAL FOREST
PROJECT NAME: LAKE MARY ROAD BIKE PATH COMPLETION PROJECT
DRAWING NAME: TAMARACK REALIGNMENT
BRIDGE DETAILS

DATE 04/01/10
SCALE AS SHOWN
DRAWN MP
JOB NO. 2008.6
DWG 6.4
SHEET 22 OF 25

GP 09-

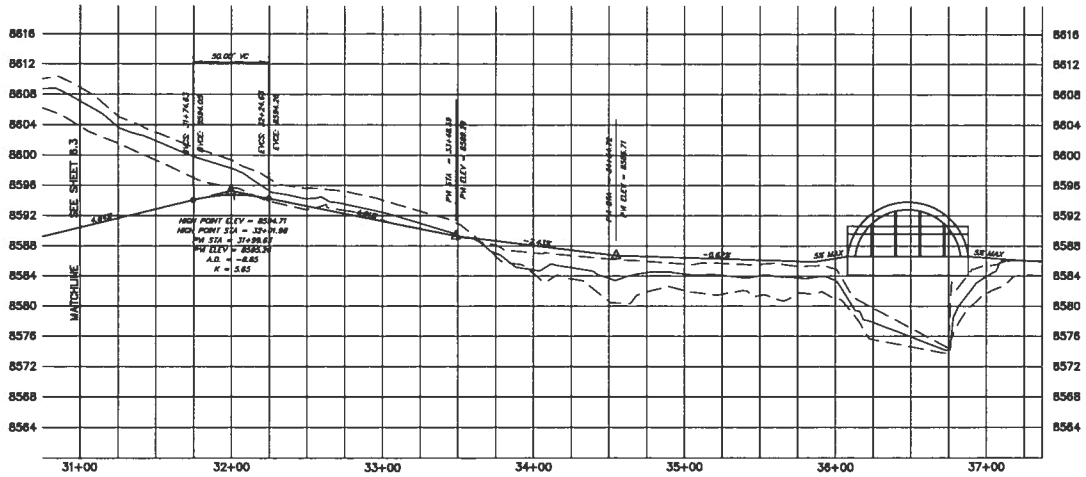

SCALE
HORIZONTAL 1"=40'
VERTICAL 1"=8'

BUS SHELTER INSTALLATION SHALL BE DONE IN COORDINATION WITH PARKING LOT CONTRACTOR

LINE TABLE		
LINE	LENGTH	BEARING
L18	103.90	N25°24'35"W
L19	172.07	N22°44'08"W
L20	132.68	N21°26'50"W
L21	101.36	N11°06'07"W
L22	48.78	N12°38'49"W

CURVE TABLE			
CURVE	LENGTH	RADIUS	DELTA
C21	9.33	200.00	2°40'27"
C22	4.50	200.00	1°17'18"
C23	119.22	660.28	10°20'42"

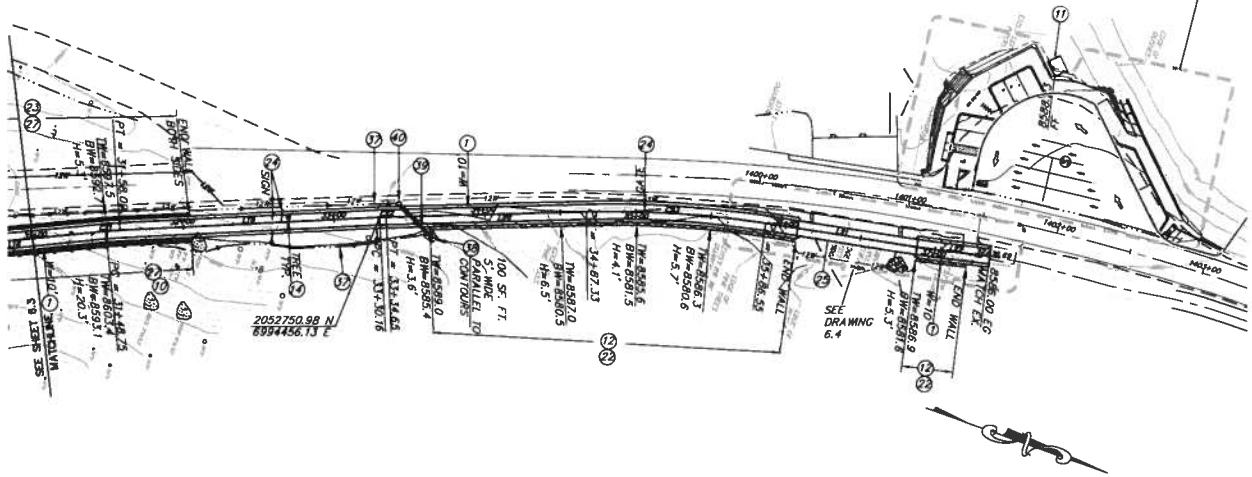

GRAPHIC SCALE
(IN FEET)
1 inch = 40 ft.

BASE BID
WORK SHOWN HEREON

USDA
FOREST
SERVICE
PACIFIC
SOUTHWEST
REGION
R5

tha
triad/holmes assoc.
civil engineering
land surveying
MAMMOTH LAKES
BISHOP
NAPA
PLEASANTON
REDWOOD CITY
SAN LUIS OBISPO

PREPARED & SUBMITTED BY:
REGISTERED PROFESSIONAL ENGINEER
PAUL EDWARD ROTEN
C 56891
CIVIL
STATE OF CALIFORNIA
DATE:

Copyright (C) 2010 by Triad/Holmes Associates. All Rights Reserved. This Document is Intended Only for Use on the Project Specified in the Title Block. Any Reproduction of this Document or Portions of this Document, Without the Expressed Written Consent of Triad/Holmes, is Prohibited.

MAMMOTH LAKES
REVIEWED BY:
TOWN OF MAMMOTH LAKES PUBLIC WORKS DEPARTMENT
RAYMOND C. JARVIS DATE
P.E. C43318

PROJECT:
INYO NATIONAL FOREST
PROJECT NAME:
LAKE MARY ROAD BIKE PATH COMPLETION PROJECT
DRAWING NAME:
TAMARACK REALIGNMENT
PLAN AND PROFILE (STA 31+00 TO END)

DATE 04/01/10
SCALE AS SHOWN
DRAWN GP/MP
JOB NO. 2008.6
DWG 6.3
SHEET 21 OF 25

GP 09-__

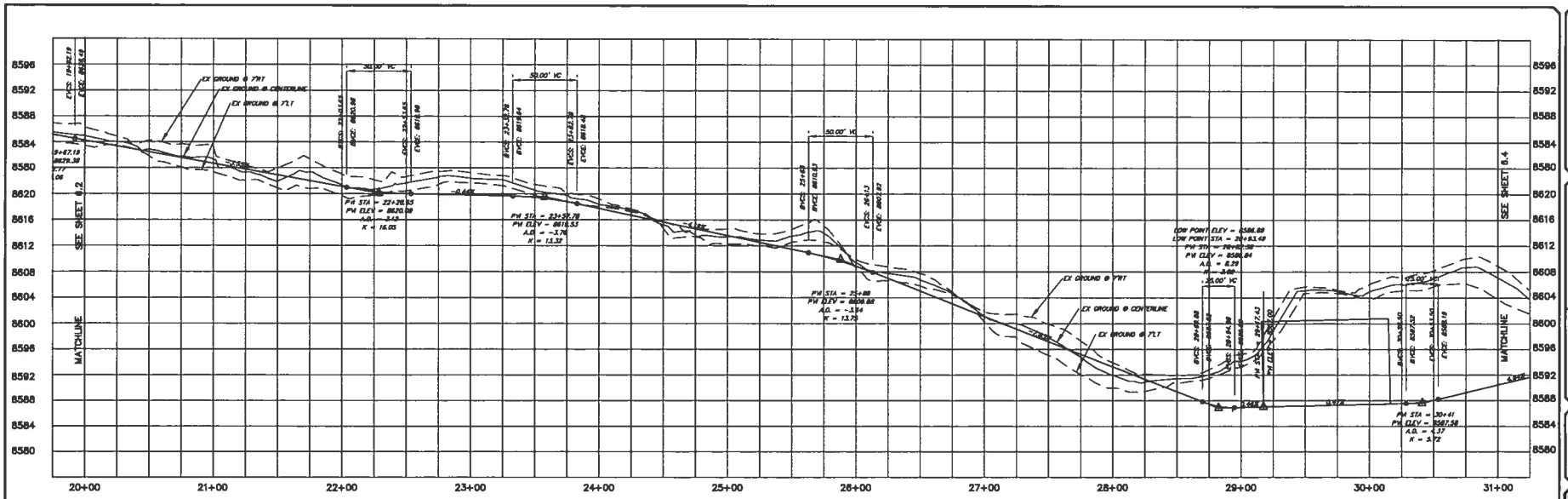

SCALE
HORIZONTAL 1"=40'
VERTICAL 1"=8'

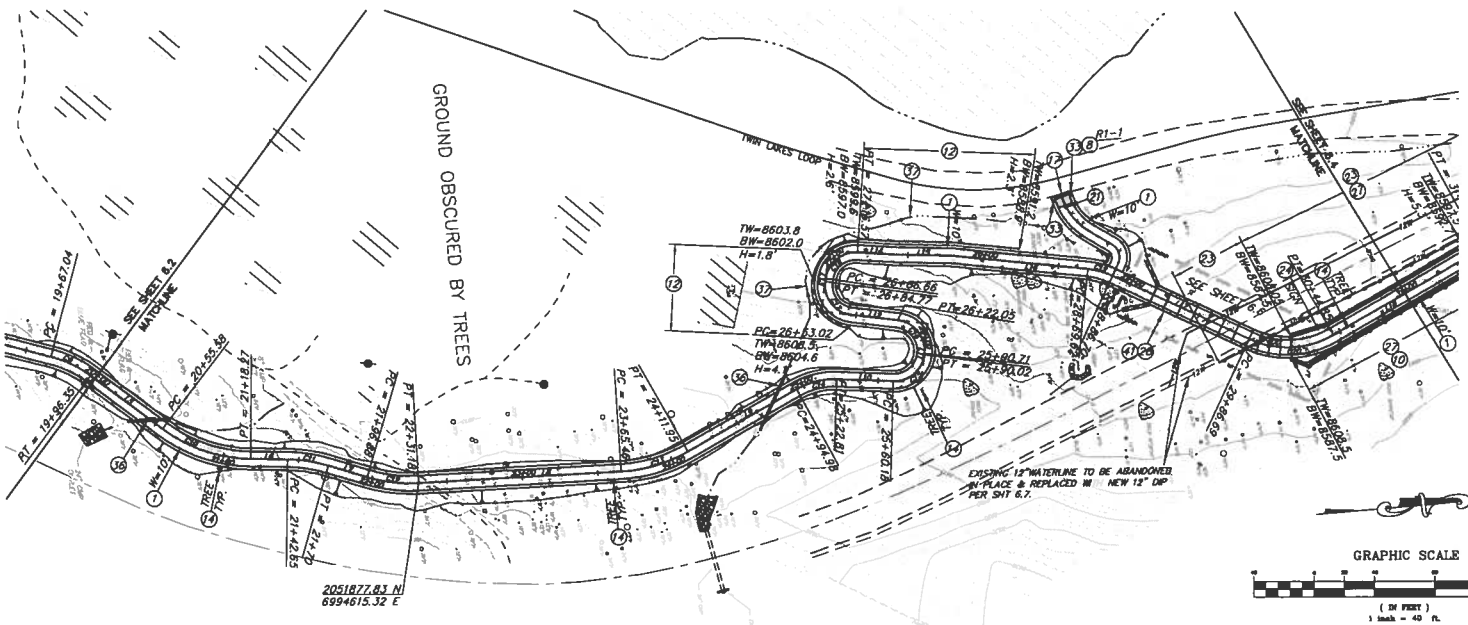

LINE TABLE		
LINE	LENGTH	BEARING
L5	59.24	N41°43'23"E
L6	24.38	N05°48'17"E
L7	26.88	N21°28'25"E
L8	134.28	N01°49'16"E
L9	83.02	N24°48'51"W
L10	37.37	N07°04'43"E
L11	0.68	N78°25'03"W
L12	30.97	S11°47'14"W
L13	1.89	N77°15'20"W
L14	25.03	N08°26'36"E
L15	37.49	N06°11'57"E
L16	90.53	N10°33'31"E
L17	99.99	N30°07'38"E
L18	103.90	N25°24'35"W

CURVE TABLE			
CURVE	LENGTH	RADIUS	DELTA
C9	29.31	75.00	22°23'22"
C10	62.69	100.00	35°55'06"
C11	27.35	100.00	15°40'06"
C12	34.30	100.00	19°39'10"
C13	46.49	100.00	26°38'06"
C14	27.83	50.00	31°53'33"
C15	29.84	20.00	85°28'48"
C16	31.34	20.00	89°47'43"
C17	31.75	20.00	90°57'28"
C18	29.91	20.00	85°41'58"
C19	17.08	50.00	19°34'06"
C20	58.16	60.00	55°32'12"

GRAPHIC SCALE
(IN FEET)
1 inch = 40 ft.

BASE BID
WORK SHOWN HEREON

APPROVED BY:
MAMMOTH COMMUNITY WATER DISTRICT

JOHN PEDERSEN DATE

USDA
FOREST
SERVICE
PACIFIC
SOUTHWEST
REGION
R5

trlad/holmes assoc.
civil engineering
land surveying
MAMMOTH LAKES
BISHOP
NAPA
PLEASANTON
REDWOOD CITY
SAN LUIS OBISPO
PREPARED & SUBMITTED BY:
REGISTERED PROFESSIONAL ENGINEER
PAUL EDWARD ROTEN
C 56891
CIVIL
STATE OF CALIFORNIA
DATE:

Copyright (c) 2010 by Trlad/Holmes Associates All Rights Reserved. This Document is Intended Only for Use on the Project Specified in the Title Block. Any Reproduction of this Document or Portions of this Document, Without the Expressed Written Consent of Trlad/Holmes, is Prohibited.

MAMMOTH
REVIEWED BY:
TOWN OF MAMMOTH
LAKES PUBLIC WORKS
DEPARTMENT
RAYMOND C. JAMES DATE
P.E. C42318

PROJECT: INYO NATIONAL FOREST
PROJECT NAME: LAKE MARY ROAD BIKE PATH COMPLETION PROJECT
DRAWING NAME: TAMARACK REALIGNMENT
PLAN AND PROFILE (STA 20+00 TO 31+00)

DATE 04/01/10
SCALE AS SHOWN
DRAWN GP/MP
JOB NO. 2008.6
DWG 6.2
SHEET 20 OF 25

GP 09-__

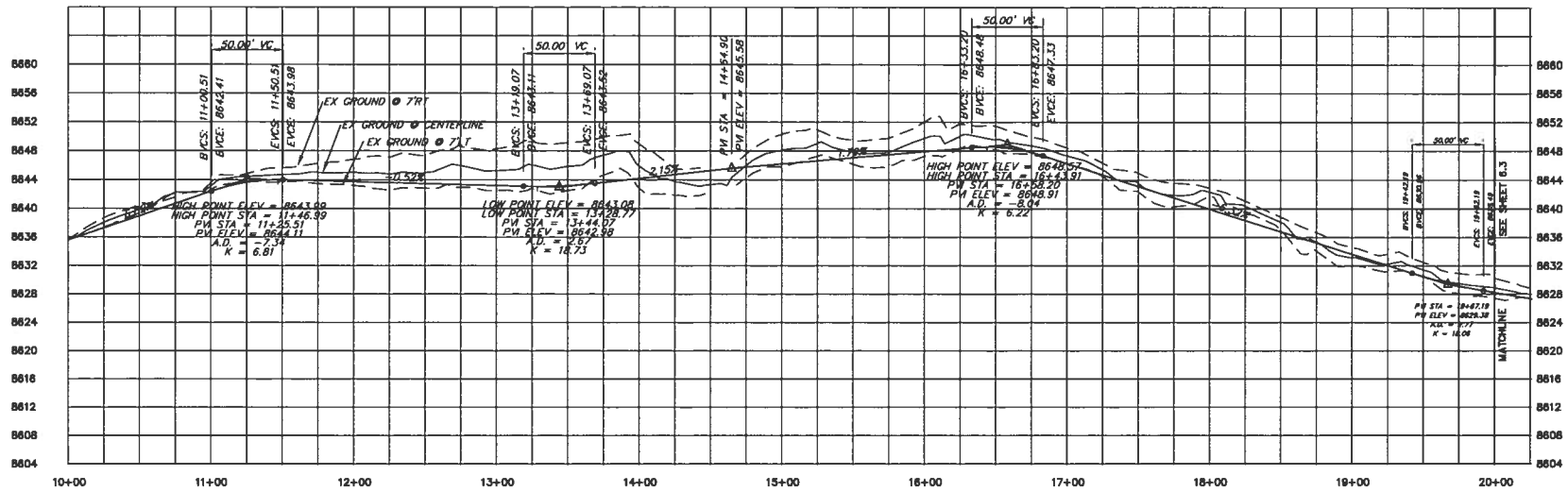

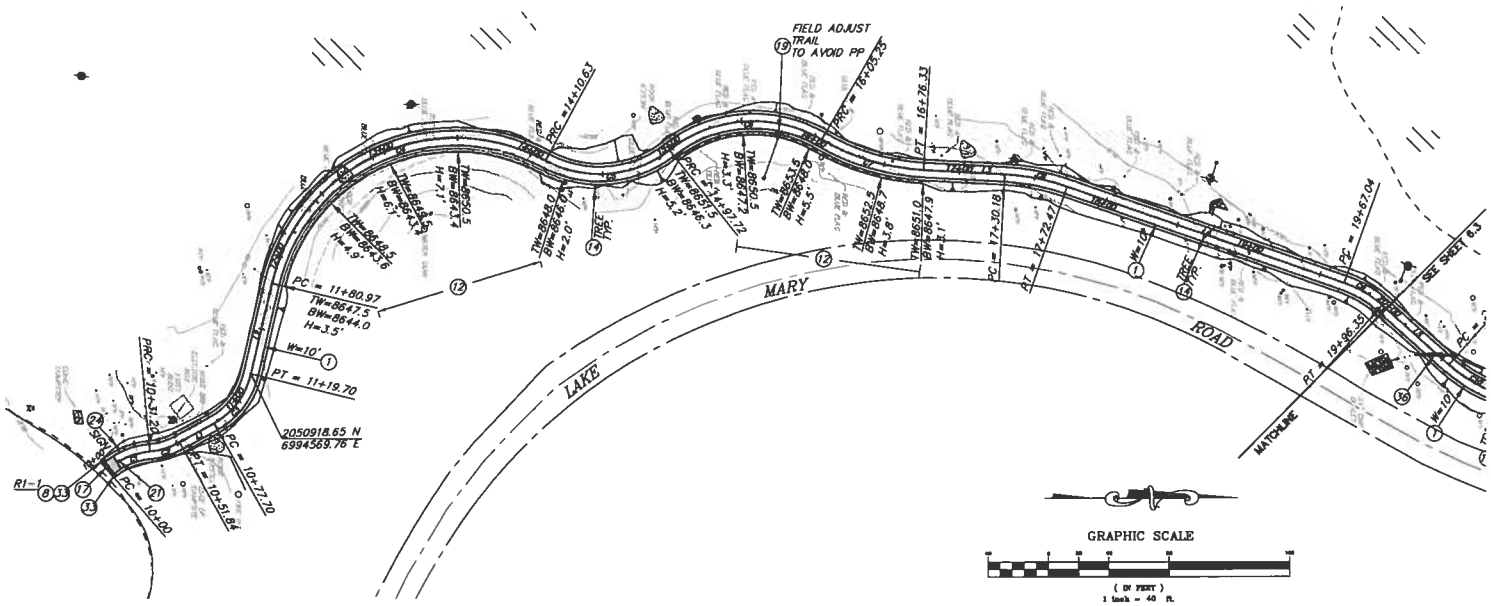

LINE TABLE		
LINE	LENGTH	BEARING
L1	25.66	N28°44'21"W
L2	61.26	N76°51'48"W
L3	53.85	N03°10'45"E
L4	194.57	N19°20'01"E
L5	59.24	N41°43'23"E

CURVE TABLE			
CURVE	LENGTH	RADIUS	DELTA
C1	31.20	50.00	35°45'03"
C2	20.65	50.00	23°39'32"
C3	42.00	50.00	48°07'27"
C4	229.66	125.00	105°16'13"
C5	67.09	75.00	68°32'04"
C6	107.53	90.00	68°27'19"
C7	71.08	150.00	27°08'56"
C8	42.29	150.00	16°09'16"
C9	29.31	75.00	22°23'22"

EARTHWORK
CUT: 5200 CY
FILL: 620 CY
NET CUT: 4580 CY
(INCLUDES EXCAVATION FOR BOX CULVERT)

BASE BID
WORK SHOWN HEREON

USDA FOREST SERVICE
PACIFIC SOUTHWEST REGION R5

triad/holmes assoc.
civil engineering
land surveying
MAMMOTH LAKES
BISHOP
NAPA
PLEASANTON
REDWOOD CITY
SAN LUIS OBISPO
PREPARED & SUBMITTED BY:
REGISTERED PROFESSIONAL ENGINEER
PAUL EDWARD ROTEN
C 56891
CIVIL
STATE OF CALIFORNIA
DATE:

Copyright (c) 2010 by Triad/Holmes Associates All Rights Reserved. This Document is Intended Only for Use on the Project Specified in the Title Block. Any Reproduction of this Document or Portions of this Document, Without the Expressed Written Consent of Triad/Holmes, is Prohibited

MAMMOTH LAKES
REVIEWED BY:
TOWN OF MAMMOTH LAKES PUBLIC WORKS DEPARTMENT
RAYMOND C. JARVIS DATE
P.E. C42318

PROJECT: INYO NATIONAL FOREST
PROJECT NAME: LAKE MARY ROAD BIKE PATH COMPLETION PROJECT
DRAWING NAME: TAMARACK REALIGNMENT
PLAN AND PROFILE (STA 10+00 TO 20+00)

DATE: 04/01/10
SCALE: AS SHOWN
DRAWN: GP/MP
JOB NO.: 2008.6
SIZE: 6.1
SHEET 19 OF 25

GP 09-__

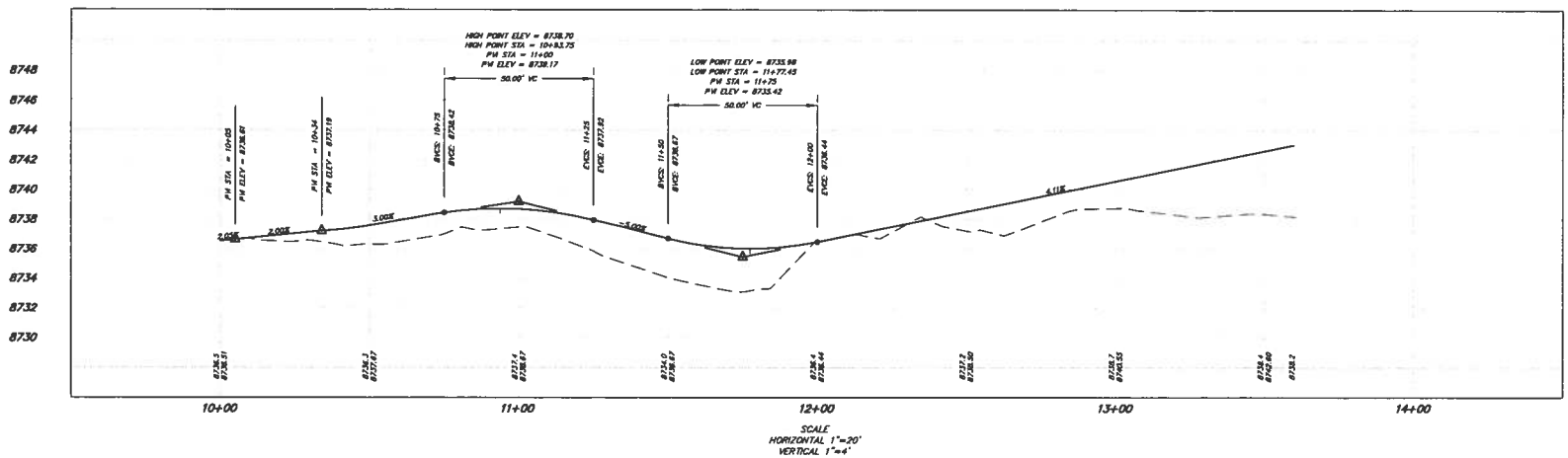

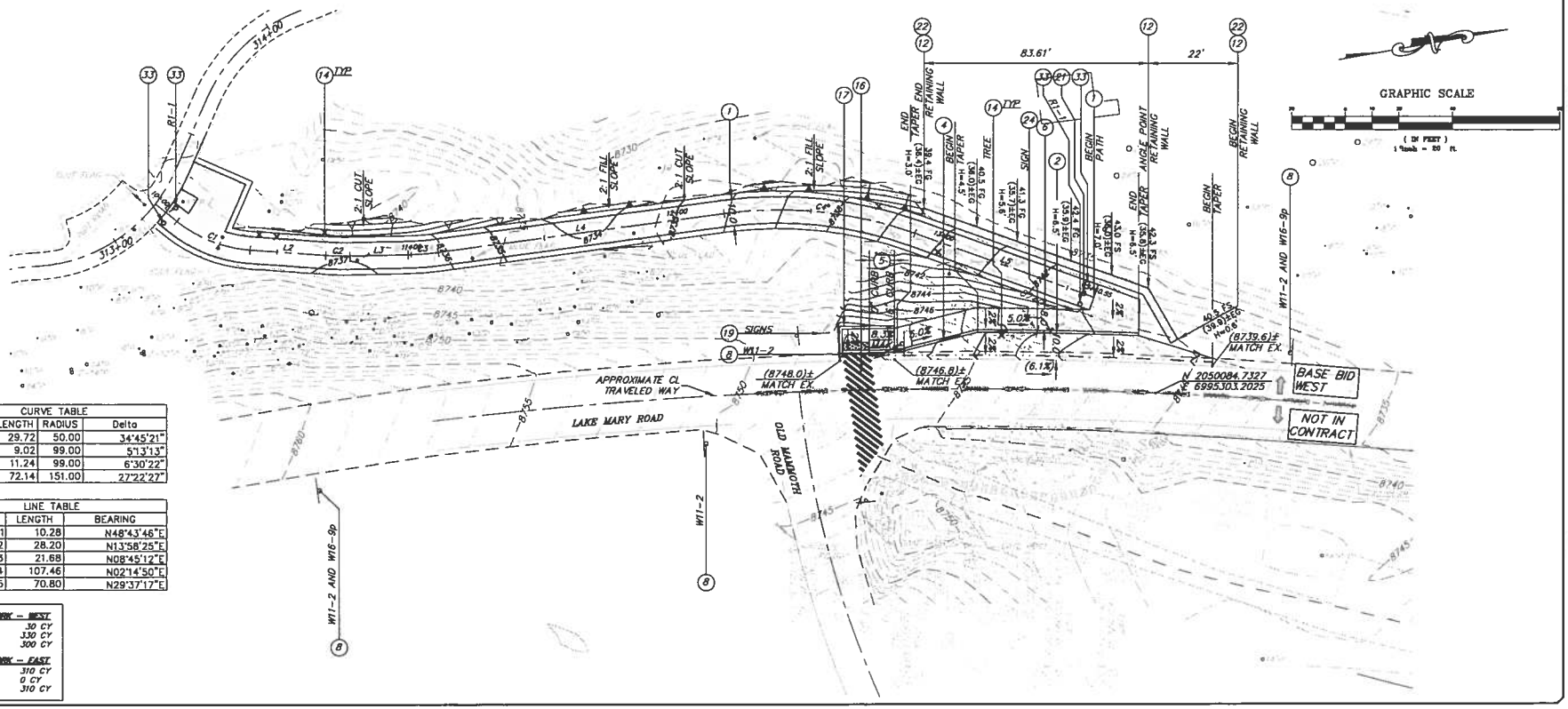

CURVE TABLE			
CURVE	LENGTH	RADIUS	Delta
C1	29.72	50.00	34°45'21"
C2	9.02	99.00	5°13'13"
C3	11.24	99.00	6°30'22"
C4	72.14	151.00	27°22'27"

LINE TABLE		
LINE	LENGTH	BEARING
L1	10.28	N48°43'46"E
L2	28.20	N13°58'25"E
L3	21.68	N08°45'12"E
L4	107.46	N02°14'50"E
L5	70.80	N29°37'17"E

EARTHWORK – WEST

CUT:	30 CY
FILL:	330 CY
NET FILL:	300 CY

EARTHWORK – EAST

CUT:	310 CY
FILL:	0 CY
NET CUT:	310 CY

USDA FOREST SERVICE

PACIFIC SOUTHWEST REGION R5

tha
triad/holmes assoc.
civil engineering
land surveying

MAMMOTH LAKES
BISHOP
NAPA
PLEASANTON
REDWOOD CITY
SAN LUIS OBISPO

PREPARED & SUBMITTED BY:

REGISTERED PROFESSIONAL ENGINEER
PAUL EDWARD ROTEN
C 56891
CIVIL
STATE OF CALIFORNIA

DATE:

Copyright (C) 2010 by Triad/Holmes Associates All Rights Reserved. This Document is Intended Only for Use on the Project Specified in the Title Block. Any Reproduction of this Document or Portions of this Document, Without the Expressed Written Consent of Triad/Holmes, is Prohibited.

MAMMOTH LAKES

REVIEWED BY:
TOWN OF MAMMOTH LAKES PUBLIC WORKS DEPARTMENT

RAYMOND C. JARVIS DATE
P.E. C42318

FOREST: INYO NATIONAL FOREST

PROJECT NAME: LAKE MARY ROAD BIKE PATH COMPLETION PROJECT

DRAWING NAME: OLD MAMMOTH ROAD PLAN AND PROFILE

DATE: 04/01/10
SCALE: AS SHOWN
DRAWN: KP/TS/MP
JOB NO.: 2008.6
DWG: 5.1
SHEET 18 OF 25

GP 09-__

K:\2008-6\ACAD\Working Drawings\2008-6 05 Old Mammoth Road R2.dwg Apr 01,2010 - 3:19pm, kpudgett

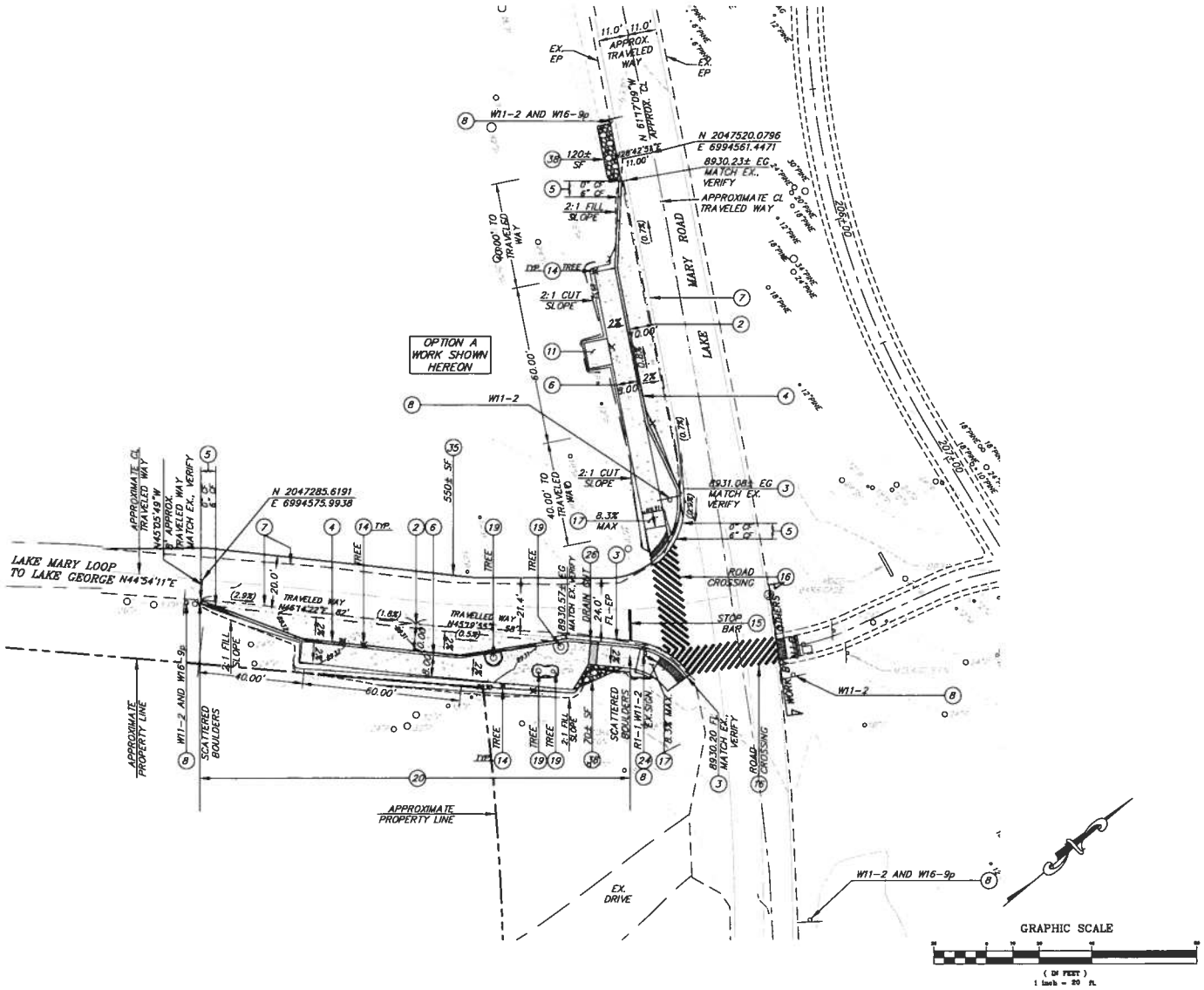

EARTHWORK			
EAST BUS PULLOUT		WEST BUS PULLOUT	
CUT:	30 CY	CUT:	90 CY
FILL:	40 CY	FILL:	0 CY
NET FILL:	10 CY	NET CUT:	90 CY

USDA FOREST SERVICE

PACIFIC SOUTHWEST REGION R5

triad/holmes assoc. civil engineering land surveying

MAMMOTH LAKES BISHOP NAPA PLEASANTON REDWOOD CITY SAN LUIS OBISPO

PREPARED & SUBMITTED BY:

REGISTERED PROFESSIONAL ENGINEER PAUL EDWARD ROTEN C 56891 CIVIL STATE OF CALIFORNIA

DATE:

Copyright (c) 2010 by Triad/Holmes Associates All Rights Reserved. This Document is Intended Only for Use on the Project Specified in the Title Block. Any Reproduction of this Document or Portions of this Document, Without the Expressed Written Consent of Triad/Holmes, is Prohibited.

REVIEWED BY: TOWN OF MAMMOTH LAKES PUBLIC WORKS DEPARTMENT

RAYMOND C. JARVIS DATE P.E. C42318

FOREST: INYO NATIONAL FOREST

PROJECT NAME: LAKE MARY ROAD BIKE PATH COMPLETION PROJECT

DRAWING NAME: POKONOBE PLAN AND DETAILS

DATE 04/01/10

SCALE AS SHOWN

DRAWN KP/TS/MP

JOB NO. 2008.6

DWG 3.1

SHEET 17 OF 25

GP 09-

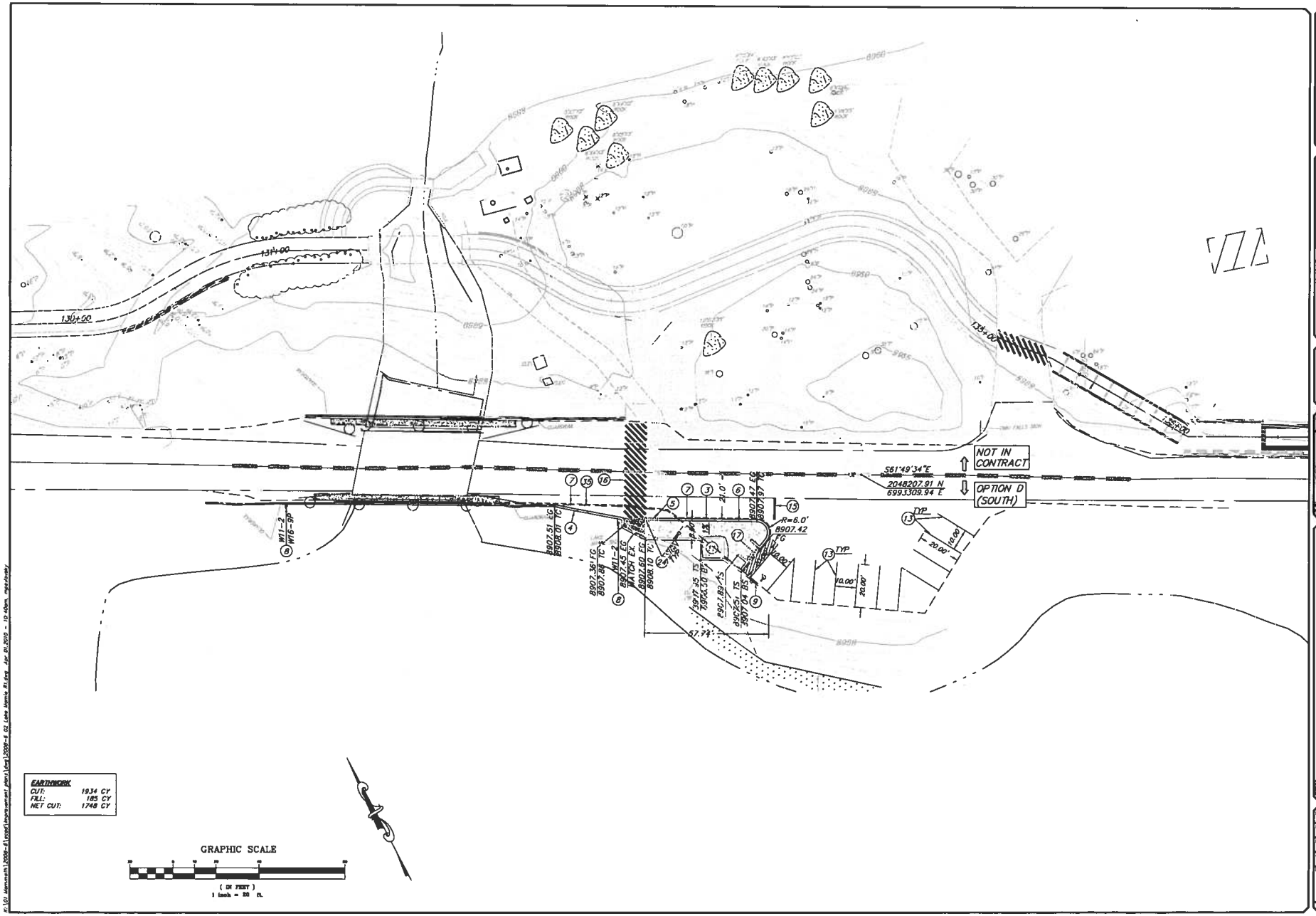

EARTHWORK	
CUT:	1934 CY
FILL:	185 CY
NET CUT:	1748 CY

USDA FOREST SERVICE

PACIFIC SOUTHWEST REGION R5

tho
triad/holmes assoc.
civil engineering
land surveying

MAMMOTH LAKES
BISHOP
NAPA
PLEASANTON
REDWOOD CITY
SAN LUIS OBISPO

PREPARED & SUBMITTED BY:

REGISTERED PROFESSIONAL ENGINEER
PAUL EDWARD ROTH
C 56891
CIVIL
STATE OF CALIFORNIA

Copyright (C) 2010 by Triad/Holmes Associates. All Rights Reserved. This Document is Intended Only for Use on the Project Specified on the Title Block. Any Reproduction of this Document or Portions of this Document, Without the Expressed Written Consent of Triad/Holmes, is Prohibited.

REVIEWED BY:
TOWN OF MAMMOTH LAKES PUBLIC WORKS DEPARTMENT

RAYMOND C. JAYNES DATE
R.E. C42319

PROJECT: INYO NATIONAL FOREST

PROJECT TITLE: LAKE MARY ROAD BIKE PATH COMPLETION PROJECT

DRAWING TITLE: LAKE MAMIE PLAN AND PROFILE

DATE	04/01/10
SCALE	AS SHOWN
DRAWN	MP
JOB NO.	2008.6
DWG	2.1
SHEET	16 of 25

CP 09-

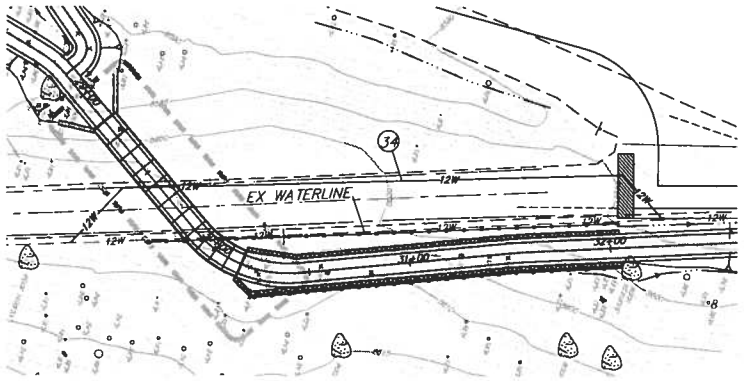

PLAN

Type of Fitting	90° Bend	45° Bend	11 ¼° or 22 ½° Bend		Tee, Valve or Dead End	Cross
Typical Installation Plan View	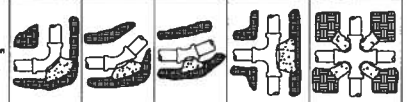					
Pipe Dia.	Min. Bearing Area in Square Feet		22½°	11¼°		
6"	9 sq. ft.	5 sq. ft.	2 sq. ft.	1 sq. ft.	6 sq. ft.	3 sq. ft.
8"	16 sq. ft.	8 sq. ft.	4 sq. ft.	2 sq. ft.	11 sq. ft.	6 sq. ft.
10"	24 sq. ft.	13 sq. ft.	7 sq. ft.	3 sq. ft.	17 sq. ft.	9 sq. ft.
12"	34 sq. ft.	19 sq. ft.	10 sq. ft.	5 sq. ft.	24 sq. ft.	13 sq. ft.

THRUST BLOCK NOTES:

1. Thrust blocks shall be constructed of 2000 psi concrete.
2. Areas shown are for a test pressure of 200 psi with 1500 psf soil bearing capacity. Installation using different test pressure and/or soil type shall be adjusted accordingly, subject to review by the engineer.
3. Thrust blocks shall be poured against undisturbed soil.
4. Joints shall be kept clear of concrete.

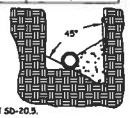

Section view

Note: Thrust restraint shall be per SD-20.1, SD-20.2 and SD-20.3 OR SD-20.4 and SD-20.5.

SD-20.1
CONCRETE THRUST BLOCK
NTS

Type of Fitting	Valves	Reducers	
Typical Installation Plan View	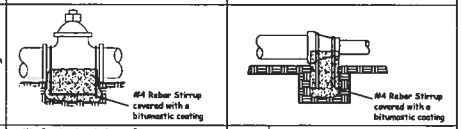		
Pipe Dia.	Min. Bearing Area in Square Feet	Reducer	
6"	6 sq. ft.	6x4	3 sq. ft
8"	11 sq. ft.	8x6	5 sq. ft
10"	17 sq. ft.	10x8	6 sq. ft
12"	24 sq. ft.	12x10	7 sq. ft.
		12x8	13 sq. ft.

THRUST BLOCK NOTES:

1. Thrust blocks shall be constructed of 2000 psi concrete.
2. Areas shown are for a test pressure of 200 psi with 1500 psf soil bearing capacity. Installation using different test pressure and/or soil type shall be adjusted accordingly, subject to review by the engineer.
3. Thrust blocks shall be poured against undisturbed soil.
4. Joints shall be kept clear of concrete.

Note: Thrust restraint shall be per SD-20.1, SD-20.2 and SD-20.3 OR SD-20.4 and SD-20.5.

SD-20.2
CONCRETE THRUST BLOCK
NTS

WATER GENERAL NOTES:

1. ALL WATER PIPE TRENCHING, INSTALLATION AND BACKFILL WILL CONFORM WITH THE DESIGN STANDARDS, SPECIFICATIONS AND REGULATIONS OF THE MAMMOTH COMMUNITY WATER DISTRICT, THESE PLANS AND WITH TOWN OF MAMMOTH LAKES STANDARD PLANS 201 AND 202.
2. MAIN WATER LINE SHALL BE DUCTILE IRON PIPE PER ANSI/AWWA C151/A21.51 AND SHALL BE POLYETHELENE ENCASED PER ANSI/AWWA C105/A21.5. FITTINGS SHALL BE DUCTILE IRON PER ANSI/AWWA C-110/A21.10 OR ANSI/AWWA C153/A21.53.
3. MINIMUM COVER ON MAIN WATER LINES WILL BE 54" (4'-6").
4. MINIMUM HORIZONTAL SEPARATION OF PARALLEL MAIN SEWER AND WATER LINES WILL BE 10 FEET. A MINIMUM VERTICAL SEPARATION OF 1 FOOT WILL BE MAINTAINED AT ALL SEWER AND WATER LINE CROSSINGS. IF 1 FOOT OF SEPARATION CANNOT BE MAINTAINED, SPECIAL CONSTRUCTION PER D.H.S. CRITERIA FOR SEPARATION OF WATER MAINS AND SANITARY SEWERS WILL GOVERN.
5. ALL WATER LINES WILL BE HYDROSTATIC PRESSURE TESTED FOR LEAKAGE PER AWWA C600-82. ALL LEAKS OR DEFECTIVE PIPE WILL BE REPAIRED OR REPLACED PRIOR TO PLACING ANY WATER LINE IN SERVICE
6. THRUST BLOCKS WILL BE CONSTRUCTED AT ALL PIPELINE BENDS, VALVES, AND FITTINGS IN ACCORDANCE WITH DETAILS SHOWN HEREIN.
7. LOCATION OF VALVES AND FIRE HYDRANTS WILL BE FIELD VERIFIED WITH THE ENGINEER AND M.C.W.D.
8. CONTRACTOR WILL NOTIFY THE ENGINEER 48 HOURS IN ADVANCE OF REQUIRED CONSTRUCTION STAKING AND SURVEY WORK. CONTRACTOR WILL NOTIFY MAMMOTH COMMUNITY WATER DISTRICT WHEN WORK COMMENCES AND TWO WORKING DAYS PRIOR TO THE TIME AN INSPECTION IS TO BE MADE.
9. CONTRACTOR WILL MAINTAIN ALL RECORDS OF AS-BUILT LOCATION OF ALL WATER AND SEWER FACILITIES INCLUDING SEWER LATERALS AND WATER SERVICE CONNECTIONS, AND WILL FURNISH SUCH RECORDS TO M.C.W.D. AND THE OWNER UPON COMPLETION OF WORK.
10. ALL REVISIONS WILL BE APPROVED BY M.C.W.D. AND THE ENGINEER PRIOR TO ANY MODIFICATIONS OF WATER SYSTEM DETAILS OR MATERIALS.
11. ALL DOMESTIC WATER LINES WILL BE DISINFECTED IN ACCORDANCE WITH THE REQUIREMENTS OF ANSI/AWWA C651. CONTRACTOR WILL NOTIFY MAMMOTH COMMUNITY WATER DISTRICT 24 HOURS PRIOR TO DISINFECTION OF LINES.
12. ALL EXISTING WATER AND SEWER LINES ARE PER AVAILABLE RECORDS. CONTRACTOR WILL FIELD VERIFY ALL EXISTING CONDITIONS PRIOR TO CONSTRUCTION.
13. TRENCH SLOPING OR SHORING WILL BE PROVIDED IN ANY TRENCHING OVER 4 FEET IN DEPTH OR AS REQUIRED BY O.S.H.A.
14. ALL PIPES WILL BE LAID AND MAINTAINED TO THE LINE AND GRADE AS REQUIRED BY THESE PLANS, UNLESS OTHERWISE APPROVED BY THE ENGINEER.
15. ALL CONCRETE COLLARS AND THRUST BLOCKS TO HAVE A MINIMUM COMPRESSIVE STRENGTH OF 2500 PSI @ 28 DAYS.

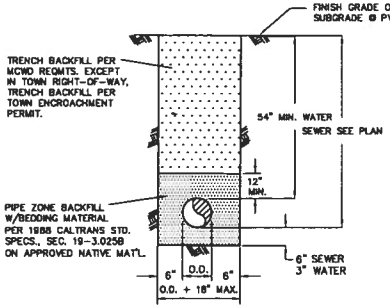

NOTE:

1. ALL BEDDING & BACKFILL SHALL BE COMPACTED TO MIN. 90% OF MATERIAL'S MAX. DRY DENSITY, EXCEPT IN AREAS OF EXISTING OR FUTURE PAVEMENT WHERE BACKFILL SHALL BE COMPACTED TO MIN. 95% OF MATERIAL'S MAX. DRY DENSITY FOR THE UPPER 12". ALL TRENCH BACKFILL IN TOWN OF MAMMOTH LAKES RIGHT-OF-WAYS SHALL BE COMPACTED TO MIN. 95% FOR THE UPPER 5 FEET.
2. TRENCH BACKFILL MATERIALS WILL BE FREE OF STONES EXCEEDING 3" IN GREATEST DIMENSION, OR ORGANIC OR OTHER UNSATIS-FACTORY MATERIAL. BACKFILL MAY BE EXCAVATED TRENCH MATERIAL.

TYPICAL TRENCH DETAIL
N.T.S.

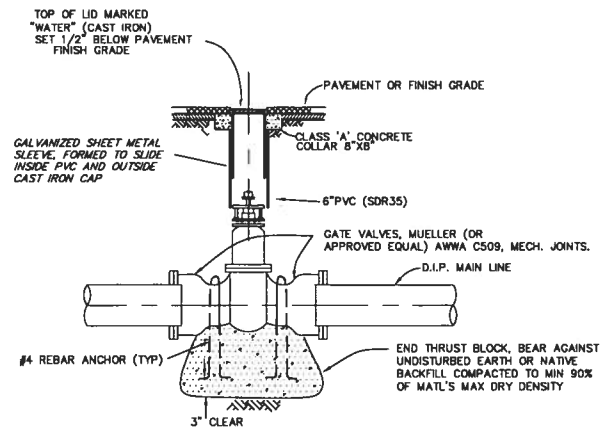

WATER VALVE DETAIL
N.T.S.

BASE BID
WORK SHOWN HEREON

APPROVED BY:
MAMMOTH COMMUNITY WATER DISTRICT FOR WATER AND SEWER FACILITIES IN RIGHTS-OF-WAY

JOHN PEDERSEN — DATE
DISTRICT ENGINEER

USDA FOREST SERVICE
PACIFIC SOUTHWEST REGION R5

tfrod/holmes assoc.
civil engineering
land surveying
MAMMOTH LAKES
BISHOP
NAPA
PLEASANTON
REDWOOD CITY
SAN LUIS OBISPO

PREPARED & SUBMITTED BY:
REGISTERED PROFESSIONAL ENGINEER
PAUL EDWARD ROTH
C 56891
CIVIL
STATE OF CALIFORNIA
DATE:

Copyright (C) 2010 by Tfrod/Holmes Associates All Rights Reserved. This Document is Intended Only for Use on the Project Specified in the Title Block. Any Reproduction of this Document or Portions of this Document, Without the Expressed Written Consent of Tfrod/Holmes, is Prohibited.

REVIEWED BY:
TOWN OF MAMMOTH LAKES PUBLIC WORKS DEPARTMENT

RAYMOND C. JAMES, P.E. C43318 — DATE

PROJECT: INYO NATIONAL FOREST
PROJECT NAME: LAKE MARY ROAD BIKE PATH COMPLETION PROJECT
DRAWING NAME: WATERMAIN REALIGNMENT WATER DETAILS

DATE 04/01/10
SCALE AS SHOWN
DRAWN GP/MP
JOB NO. 2008.6
DWG 6.7
SHEET 25 OF 25

GP 019

K:\01 Mammoth\2008-6\proj\improvement plans\dwg\2008-6 OR Tomorrow R3.dwg Apr 01,2010 - 10:33am, mpeirsoll